AN INTRODUCTORY CATALOGUE OF COMPUTER SYNTHESIZED SOUNDS

by

J.C. RISSET

Bell Telephone Laboratories
Murray Hill, New Jersey

1969

An Introductory Catalogue of Computer Synthesized Sounds

by

J. C. Risset
Bell Telephone Laboratories
Murray Hill, New Jersey

ABSTRACT

This introductory catalogue presents some 25 examples of sounds generated by computer, using M. V. Mathews' Music V programs. Some of the sounds are instrument-like; some are not. The catalogue consists of the combination of a tape (or a record) of the sounds, which permits one to evaluate them aurally, and of the computer data used for the synthesis of the sounds, which affords a thorough description of the physical structure of these sounds. This is intended as an example to be followed by people working in sound synthesis, so that others can benefit from their findings and so that an extended repertory of sounds can be made available for tone quality studies and for computer music.

An Introductory Catalogue of Computer
Synthesized Sounds

by

J. C. Risset
Bell Telephone Laboratories
Murray Hill, New Jersey

Table of Contents

Introductory Notes

This limited "catalogue" presents examples of various types of musical sounds generated by computer, using Music V programs. A general description of the synthesis process is given in reference(1); more details on both the process and the particular program used can be found in reference(2). For each synthesis the user of the programs must provide data which corresponds to the physical parameters of the desired sound. The data used to synthesize a musical excerpt will be from now on referred to as the computer "score" for that excerpt.

It has long been recognized(3) that in order to take advantage of the unlimited resources of computer synthesis of sound, one had to develop a body of psychoacoustical knowledge, enabling him to specify the physical parameters corresponding to a desired type of sound. Experiments with the seemingly well-known sounds of some musical instruments(4) have shown that such knowledge was still very poor, but that computer synthesis of sound was an invaluable tool to remedy this situation.

This catalogue presents results of computer syntheses for some instrument-like and some non-instrument-like sounds. It consists of the combination of a tape (or a record) of the sounds, which permits the evaluation of these sounds aurally, and of the corresponding computer scores with some additional explanations, which gives the recipe for synthesis and also affords a thorough description of the physical structure of the sounds. Thus the reader-listener can relate the physical parameters of the sounds and their subjective effect; he is also able to resynthesize the sounds by using the same or other programs, or any process enabling him to control the necessary physical parameters.

Each example presented is numbered on the tape and on the write-up. Together with the score, some explanations are given on the purpose of the example, on the design of the instrument, and on the stored functions used. Ahead of the examples a description and a listing are provided for a CØNVT subroutine and some GEN subroutines used in the examples but not described in the Music V manual(2).

It must be emphasized that the sounds are presented as examples and by no means as models. In several instances no attempt has been made to optimize the synthesis with regard to simplicity or efficiency; also most of the instrument-like sounds do not attempt a close imitation of real sounds. In our experience, examples of certain types of sounds with their description are most useful, since this provides a starting point for a systematic exploration of the synthesis of sounds of these types: it is then rather straightforward to find and discard unimportant features by systematic variations of the parameters. For the sounds presented here, the physical parameters have been deduced from data on real musical instruments or from the results of various synthesis attempts.

Several of the syntheses presented are not very economical. Simple and economical syntheses are in general easy to explore, and complexity seems often necessary to generate varied sounds with life and musical interest. Yet there exist economical and non-trivial ways to synthesize interesting sounds: for instance through the use of unusual frequency modulations, as explored by John Chowning at Stanford University; or through the use of non-linear transfer of waves or ring-modulation-like operations, as exemplified in #150 and #550 of this catalogue.

Some of the sound examples presented (#490, 502, 503, 512, 517) are not directly output from the computer but obtained from mixing one or several computer runs. Obviously mixing deprives the user of some of the computer's precision and convenience, and it requires good electroacoustic equipment. Yet, as discussed in #512, it helps the user to control the balance of amplitudes of several voices, and it may permit the same computer runs to be used repeatedly.

Listeners are encouraged to listen to the examples at different tape speeds or backwards: these easy manipulations correspond to simple changes in the physical parameters.

The numbers of the examples are in general nonconsecutive: this is to permit us to insert later new examples at what seems the most logical place. Yet it must be noted that no attempt has been made to classify the sounds presented in a rigorous way. The problems here are formidable, since the dimensionality of timbre perception seems quite high.

This catalogue is only a by-product of some sound explorations, but we hope that it will stimulate other people working in the field of synthetic sound to do the same kind of presentation of their work: then one could take advantage of their results, and an extended repertory of sounds would gradually build up and be made readily available, which could benefit studies in tone quality and perhaps other fields of psychoacoustics[5] as well as computer music.

References

(1) M. V. Mathews. "The Digital Computer as a Musical Instrument", Science, 142 (1963) pp.553-557.

(2) M. V. Mathews. The Technology of Computer Music. M.I.T. Press, Cambridge, Mass., 1969.

(3) M. V. Mathews, J. R. Pierce, & N. Guttman. "Musical Sounds from Digital Computers", Grav. Blatter 23/24 (1962) p. 109.

J. C. Tenney. "The Physical Correlates of Timbre", Grav. Blatter 26 (1965) pp.106-109.

J. R. Pierce, M. V. Mathews, & J. C. Risset. "Further Experiments on the Use of the Computer in Connection with Music", Grav. Blatter 27/28 (1965) pp.92-97.

(4) J. C. Risset & M. V. Mathews. "Analysis of Instrument Tones", Physics Today, 22, No. 2 (Feb. 1969) pp.23-30.

(5) R. N. Shepard. "Circularity in Judgments of Relative Pitch", J.Acoust.Soc.Am., 36 (1964) pp.2346-2353.

J. C. Risset. "Pitch Control and Pitch Paradoxes Demonstrated with Computer-Synthesized Sound", J.Acoust. Soc.Am., 46 (Pt.1) (1969) p.88 (abstract only).

(6) M. V. Mathews. "The Computer Music Record Supplement", Grav. Blatter 26 (1965) p. 117.

ACKNOWLEDGMENT

I dedicate this catalogue to Max V. Mathews as a token of admiration and gratitude. It was indeed a great fortune and a great pleasure for me to work with him and to use the wonderful new means he forged to make music.

APPENDIX

General CØNVT Subroutine

For several of the runs which follow, a "general CØNVT" has been used. It has been designed by P. Ruiz to perform standard conversions without having to change the subroutine. One specifies for each instrument (from #1 to #5) which P field must undergo which conversion by setting Pass II variables in the following way:

for instrument #1: SV2 0 10 i N_1 N_2 ... N_i;

#2: SV2 0 20 ...

i is the number of note cards fields to be converted.

If one wants to convert P6 as a frequency (that is, P(6) = (Function length/Sampling rate)*P(6)), one sets N_1=6.

If one wants to convert P7 as a duration increment (that is, P(7) = (Function length/Sampling rate)/P(6)), one sets N_2=-7.

The conversion to increments for the ENVelope generator is done as follows. One must provide 3 fields, the 1st one (e.g., P8) for attack time (in s), the 2nd one (e.g., P9) for steady state time, the 3rd one (e.g., P10) for decay time. On the note card P9 is dummy, only attack and decay times need to be specified to their actual value. The CØNVT will determine the steady state time by subtracting P8+P10 from P4 (duration of the note)(if the result is negative it will assume steady state duration 0(e.g., P9=Function length/4) and shorten P8 and P10 so that P8+P10 = P4). It will then apply conversion $P_{(j)}$=(Function length/4*Sampling rate)/$P_{(j)}$). To get P8, P9, P10 converted this way, one simply sets N_4=108.

This CØNVT provides also for conversion for the FLT (filter) unit generator (not used in the examples).

```
CGCCNVT                   GENERAL CONVT
C*******CONVERT***FREQUENCY***TIME****ENV. PARAMETERS******
C*****FOR INST 1 SV2 0 10 N N1 N2 N3...
C*****FOR INST 2 SV2 0 20 ....
C****N NUMBER OF FIELDS TO CONVERT
C*****N1,N2...FIELDS NUMBERS
C***************
C*******E. G. TO CONVT P6 AS A FREQUENCY N1=6
C*****TO CONVT P7 AS A TIME INCREMENT N2=-7
C******TO HAVE P8 P9 P10 AS ATTACK STEADY STATE(DUMMY) AND DECAY TIMES
C*****FOR ENVELOPE  N3=108
C*****TO HAVE P11 AND P12 AS CENTER FREQUENCY AND HALF BANDWIDTH IN HZ
C******FOR FILTER N4=211
C*****IF THIS IS ALL N=4
C***************
      SUBROUTINE CONVT
      COMMON IP(10),P(100),G(1000)
      IF(G(3).NE.0.0) RETURN
      IF(P(1).NE.1.0) RETURN
      FREQ=511.0/G(4)
      I=P(3)
      NPAR=G(10*I)
      IF(NPAR.EQ.0) GOTO 1
      DO 2 J=1,NPAR
      M=10*I+J
      M=G(M)
      IF(M.GT.200)GOTO40
      IF(M.GT.100) GOTO 30
      IF(M.LT.0) GOTO 20
C*******FREQUENCY*******
      P(M)=FREQ*P(M)
      GOTO2
C*****TIME*****
20    M=-M
      P(M)=FREQ/P(M)
      GOTO2
C******ENVELOPPE******
30    M=M-100
      P(M+1)=P(4)-P(M)-P(M+2)
      IF(P(M+1))32,33,34
 32   P(M)=(P(M)*P(4))/(P(M)+P(M+2))
      P(M+2)=(P(M+2)*P(4))/(P(M))
      P(M+2)=(P(M+2)*P(4))/(P(M)+P(M+2))
 33   P(M+1)=128.
      GOTO35
 34   P(M+1)=FREQ/(4.0*P(M+1))
 35   P(M+2)=FREQ/(4.0*P(M+2))
      P(M)=FREQ/(4.0*P(M))
      GOTO2
C******FILTER******
 40   M=M-200
      D=-(6.2832*P(M+1))/G(4)
      F=(6.2832*P(M))/G(4)
      P(M)=2.*EXP(D)*COS(F)
      P(M+1)=EXP(2.*D)
2     CONTINUE
1     CONTINUE
      RETURN
      END
```

Some GEN subroutines not described in Music V manual have been used in the following examples. Here is given a description of these subroutines, together with the listing.

(A slight change has been performed in Pass III main program to extend the computed GØTØ following statement number 3, so that one can provide GEN subroutines GEN6, GEN7, GEN8, GEN9.)

GEN1, GEN2 and GEN3 are as in M. V. Mathews' book, The Technology of Computer Music, except for a slight difference in the definition of functions generated by GEN1: in the scores given here, the abscissas range from 1 to 512, while in the book they range from 0 to 511.

GEN4

GEN4 is a Fortran subroutine to generate a stored function as the sum of segments of sinusoids.

The calling sequence is

CALL GEN4

Data is supplied by the P(n), I(n), and IP(n) array:

CØMMØN I, P/PARM/IP

GEN4 is written in Fortran and requires a sine function SIN(X) which produces the sine of an argument given in radians.

The j^{th} function $F_j(i)$ is generated according to the relation:

$$F_j(i) = (\text{Amplitude Normalizer}) \times \sum_{k=1}^{N} A_k \sin\left[\frac{2\pi}{IP(6)-1}(F_k i + P_k)\right]$$

$$i = I_k, I_k+1, \ldots, J_k$$

$$0 \leq i \leq IP(6)-1$$

The Amplitude Normalizer is computed so that $\max |F_j(i)| = .99999$.

The parameters of the function must be arranged as follows in the data statement:

P(1)	P(2)	P(3)	P(4)	P(5)	P(6)	P(7)	P(8)	P(9)	P(10)	P(11)..
GEN	Action Time	4	Function No. (j)	A1	F1	P1	I1	J1	A2	F2

A1 is amplitude

F1 is frequency multiplier

P1 is phase (in samples)

I1 is starting sample

J1 is ending sample

Example:

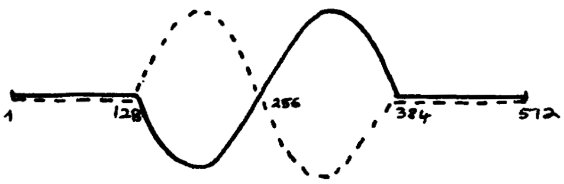

Continuous line function: GEN, 0, 4, 1, 10*, 2, 0, 128, 384;

*arbitrary

Broken line function: GEN, 0, 4, 2, 10*, 2, 256**, 128, 384;

It must be noted that only relative amplitude of components is relevant; the function being normalized, the 10(*) could as well be 1 or 100. On the other hand, phases are expressed in samples (**): 0 corresponds to 0 phase; 128 corresponds to 90° or $\frac{\pi}{4}$, 256 to 180° or $\frac{\pi}{2}$, and 384 to 270° or $\frac{3\pi}{4}$.

In case harmonic partials are used, the first and the last samples of the function are equal: $F_j(0) = F_j[IP(6)-1]$, thus the period in samples is IP(6)-1.

The function is stored starting in I(n) and is scaled by IP(15):

$$I(n) = IP(15)*F_j(0), \text{ etc. where}$$
$$n = IP(2)+(j-1)*IP(6)$$

```
$      FORTRAN LSTOU
CGEN4                  FUNCTION GENERATOR 4
C                       ***MUSIC V***
C      P(5) AMPLITUDE, P(6) FREQUENCY MULTIPLIER, P(7) PHASE, P(8) STARTI
C     ING SAMPLE, P(9) ENDING SAMPLE
      SUBROUTINE GEN4
      DIMENSION I(15000),P(100),IP(20),A(7000)
      COMMON I,P/PARM/IP
      EQUIVALENCE(I,A)
      SCLFT=IP(15)
      N1=IP(2)+(IFIX(P(4))-1)*IP(6)
      N2=N1+IP(6)-1
      DO 100 K1=N1,N2
  100 A(K1)=0.0
      FAC=6.283185/(FLOAT(IP(6))-1.0)
      NMAX=I(1)-4
      DO 103 L=5,NMAX,5
      P2=P(L)
      P3=P(L+1)
      P4=P(L+2)
      JP5=P(L+3)
      IP5=JP5+N1-1
      IP6=IFIX(P(L+4))+N1-1
      DO 105 J=IP5,IP6
      XJ=J-JP5-N1+1
      ARG= XJ*P3+P4
  105 A(J)=A(J)+P2*SIN(FAC*ARG)
  103 CONTINUE
      XMAX=0.0000001
      DO 115 J=N1,N2
      IF(XMAX-ABS (A(J)))116,115,115
  116 XMAX=ABS (A(J))
  115 CONTINUE
      DO 120 L=N1,N2
  120 I(L)=(A(L)*SCLFT*.99999)/XMAX
  113 RETURN
      END
```

GEN5

GEN5 is a Fortran subroutine which simply performs various calls in order to skip files or to write an end of file on the output tape.

GEN6

GEN6 is a Fortran subroutine to generate a stored function giving exponential attacks and decays with the ENVelope unit generator.

The calling sequence is

CALL GEN6

Data is supplied by the P(n), and IP(n) array:

CØMMØN I, P/PARM/IP

GEN6 is written in Fortran and requires both an exponential and a base 10 logarithmic function: EXP(X), ALØG(X).

The parameters of the function are given in the data statement:

P(1)	P(2)	P(3)	P(4)	P(5)	P(6)	P(7)	P(8)
GEN	Action Time	6	Function No. (j)	$-\log_2 A1$	A2	A3	$-\log_2 A4$

The function is computed according to the following figure:

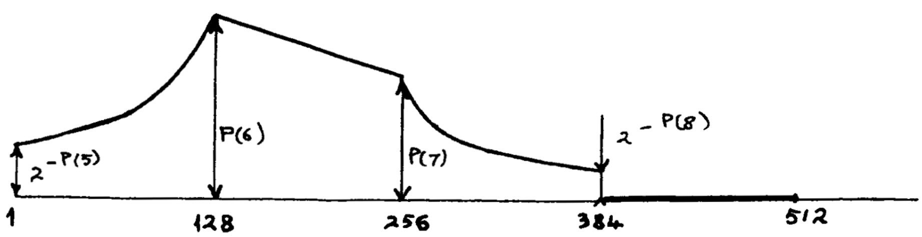

The 1st 128 samples of the function increase exponentially from a value $2^{-P(5)}$ (e.g., 1/2048 if P(5)=11) to a value P(6). They correspond to the attack portion of the envelope generator.

The following 128 samples of the function interpolate linearly between values P(6) and P(7). They correspond to the steady state portion of the envelope generator.

The following 128 samples of the function decrease exponentially from value P(7) to value $2^{-P(8)}$.

The last 128 samples of the function are zero.

The function is scaled so that its maximum value is .99999.

If P(5) or P(8) are zero or negative, the subroutine will give them the default value 2^{-11}.

If P(6) or P(7) are zero or negative, the subroutine will give them the default value .99999.

Examples:

GEN 0 6 2 2 .99 .5 10;

will give for F2

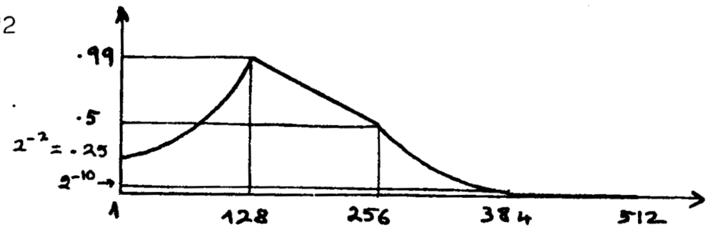

GEN 0 6 3;

will give for F3

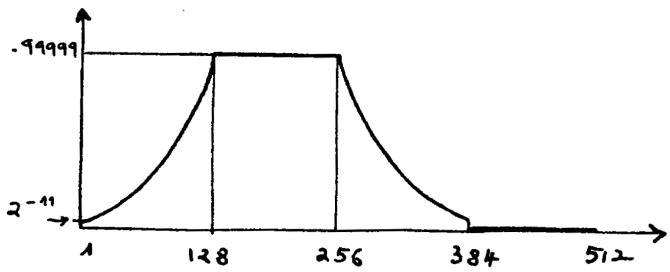

```
CGEN6                       GEN6 FOR ENVELOPE
C                        *****MUSIC V*****
CGEN6 FOR ENVELOPE WITH EXPONENTIAL ATTACK AND DECAY
      SUBROUTINE GEN6
      DIMENSION I(15000),P(100),IP(20)
      DIMENSION A(512)
      COMMON I,P/PARM/IP
      SCLFT=IP(15)
      N1=IP(2)+(IFIX(P(4)+0.001)-1)*IP(6)
 6    N11=N1-1
      N6=IP(6)
      N2=N6/4
      XNQ=N2-1
      N3=N2+N2
      N4=N3+N2
      ARG1=P(5)
      ARG2=P(6)
      ARG3=P(7)
      ARG4=P(8)
      IF(ARG1)610,610,611
 610  Y1=11.*ALOG(2.)/XNQ
      GOTO612
 611  Y1=ARG1*ALOG(2.)/XNQ
 612  CONTINUE
      IF(ARG2)614,614,615
 614  Y2=.99999
      GOTO616
 615  Y2=ARG2
 616  CONTINUE
      IF(ARG3)618,618,619
 618  Y3=.99999
      GOTO620
 619  Y3=ARG3
 620  CONTINUE
      IF(ARG4)622,622,623
 622  Y4=11.*ALOG(2.)/XNQ
      GOTO624
 623  Y4=ARG4*ALOG(2.)/XNQ
 624  CONTINUE
      DO 630 J=1,N2
      XJ=J-N2
      YJ=Y1*XJ
      A(J)=.99999*EXP(YJ)*Y2
      JJ=J+N11
 630  I(JJ)=A(J)*SCLFT
      FACT=(Y3-Y2)/XNQ
      NN2=N2+1
      DO 640 J=NN2,N3
      AJ=J-N2
      A(J)=.99999*(Y2+FACT*AJ)
      JJ=J+N11
 640  I(JJ)=A(J)*SCLFT
      NN3=N3+1
      DO 650 J=NN3,N4
      XJ=NN3-J
      YJ=Y4*XJ
      A(J)=.99999*EXP(YJ)*Y3
      JJ=J+N11
 650  I(JJ)=A(J)*SCLFT
      NN4=N1+N4
      NN6=N11+N6
      DO660 J=NN4,NN6
```

GEN 6 continued

```
660  I(JJ)=0
     RETURN
     END
```

GEN7

GEN7 is a Fortran subroutine to generate a stored function which can be a rising exponential, a decaying exponential, or a bell-shaped curve.

The calling sequence is

CALL GEN7

Data is supplied by the P(n), I(n), and IP(n) array:

CØMMØN I, P/PARM/IP

The parameters of the function are given in the data statement:

P(1)	P(2)	P(3)	P(4)	P(5)	
GEN	Action Time	7	Function Number	n	;

If P(5)>0 GEN7 will compute a function rising exponentially from $2^{-P(5)}$ to .99999. Such a function used to control frequency will cause the pitch to go up P(5) octaves (if P(5) is integer).

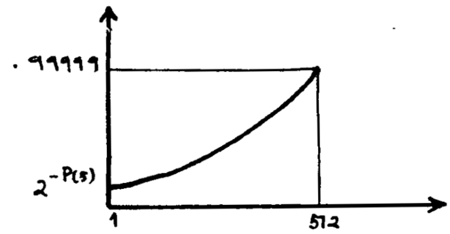

If P(5)<0 GEN7 will compute a function decaying exponentially from .99999 to $2^{-P(5)}$. Such a function used to control frequency will cause the pitch to go down P(5) octaves (if P(5) is integer).

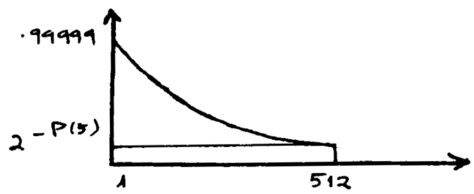

If P(5)=0 GEN7 will compute a bell-shaped function as represented on the figure. If the ordinate scale is in db, the curve

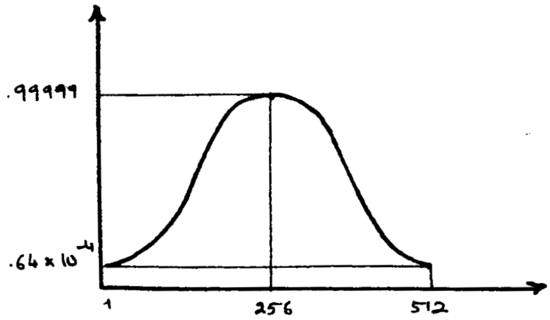

is a portion of a sine wave with a D.C. bias. The peak ordinate is equal to .99999 and the end points ordinates are equal to $.64\times10^{-4}$, which is 84db below. The formula used is

$$F(x) = \exp[\log(.008)(1-\cos 2\pi(\frac{x-256.5}{511}))]$$

```
CEGGEN7                GEN 7 FOR GLISSANDI OR EXPONENTIAL DECAYS
C                                            ***********
C       IF P(5)=N POSITIVE GO UP N OCTAVES
C       IF P(5)=-N GO DOWN N OCTAVES
C       CONSTANT NUMBER OF SAMPLES PER OCTAVE(EXPONENTIAL PROGRESSION)
C       IF P(5)=0 DRAW SPECIAL SPECTRAL ENVELOPE
        SUBROUTINE GEN7
        DIMENSION I(15000),P(100),IP(20),A(7000)
        COMMON I,P/PARM/IP
        EQUIVALENCE(I,A)
        SCLFT=IP(15)
        N1=IP(2)+(IFIX(P(4))-1)*IP(6)
        N2=N1+IP(6)-1
        DO 100 K=N1,N2
  100   A(K)=0.0
        IF(P(5))200,300,250
C       GO DOWN P(5) OCTAVES
  200   XN= P(5)*ALOG(2.)/511.
        DO 205 J=N1,N2
        XJ=J-N1
        YJ=XN*XJ
        A(J)=EXP(YJ)*.99999
  205   I(J)=A(J)*SCLFT
        GOTO500
C       GO UP P(5) OCTAVES
  250   XN= P(5)*ALOG(2.)/511.
        DO 255 J=N1,N2
        XJ=J-N1-511
        YJ=XN*XJ
        A(J)=EXP(YJ)*.99999
  255   I(J)=A(J)*SCLFT
        GOTO500
C       AMPLITUDE FOR ENDLESS GLISSANDI
  300   CONTINUE
        DO 325 J=N1,N2
        XJ=J-N1+1
        YJ=(6.2832*(XJ-256.5))/511.
        ZJ=ALOG(.008)*(1.-COS(YJ))
        A(J)=EXP(ZJ)*.99999
  325   I(J)=A(J)*SCLFT
  500   RETURN
        END
```

GEN8

GEN8 is a Fortran subroutine to generate a stored function which can be a bell-shaped curve with one, two or three peaks.

The calling sequence is

CALL GEN8

Data is supplied by the P(n), I(n), and IP(n) array:

CØMMØN I,P/PARM/IP

The parameters of the function are given in the data statement:

P(1)	P(2)	P(3)	P(4)	P(5)	P(6)	
GEN	Action Time	7	Function Number	n	m	;

P(6) field is used only if P(5)=0.

If P(5)=0, GEN8 computes a bell-shaped function with one peak, as shown on the figure. If P(6)=0, default value P(6)=1 is assumed: This corresponds to end points ordinates 42db below the peaks ordinates. The function is computed according to the formula

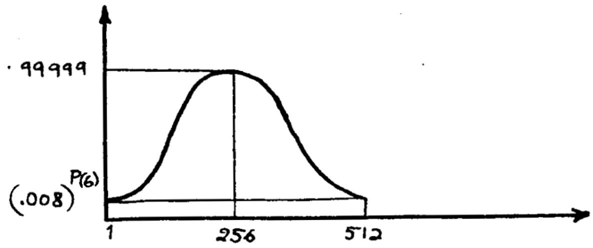

$$F(x) = \exp\left\{\log(.008)\times\frac{P(6)}{2}\times\left[1-\cos\left(2\pi\frac{n-256.5}{511}\right)\right]\right\}$$

If P(5)>0, GEN8 computes a bell-shaped function with two peaks, as shown on the figure. The function is computed according to the formula:

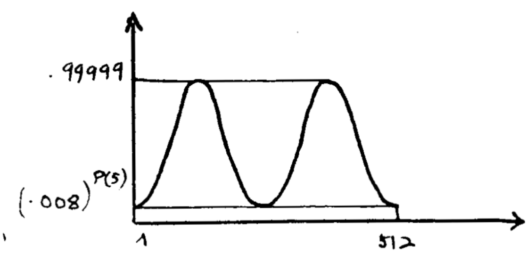

$$F(x) = \exp\left\{\log(.008)\times\frac{P(5)}{2}\times[1-\sin2\pi(\frac{x-65}{256})]\right\}$$

For P(5)=1, the end points ordinates are 42 db below the peaks ordinates.

If P(5)<0, GEN8 computes a bell-shaped function with three peaks, as shown on the figure. The function is computed according to the formula:

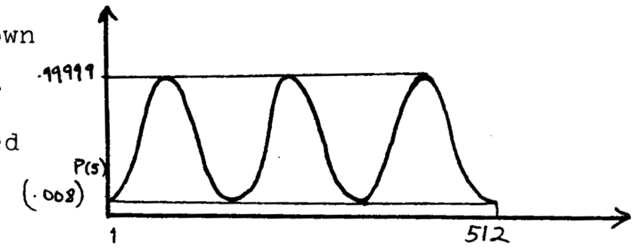

$$F(x) = \exp\left\{\log(.008)\times[\frac{-P(5)}{2}]\times[1-\sin2\pi(\frac{x-44}{170})]\right\}$$

For P(5)=-1, the end points ordinates are 42db below the peaks ordinates.

NUMB T1620 15.889 09/20
BOX M147.J.C.RISSET X25
PAGE NO 1

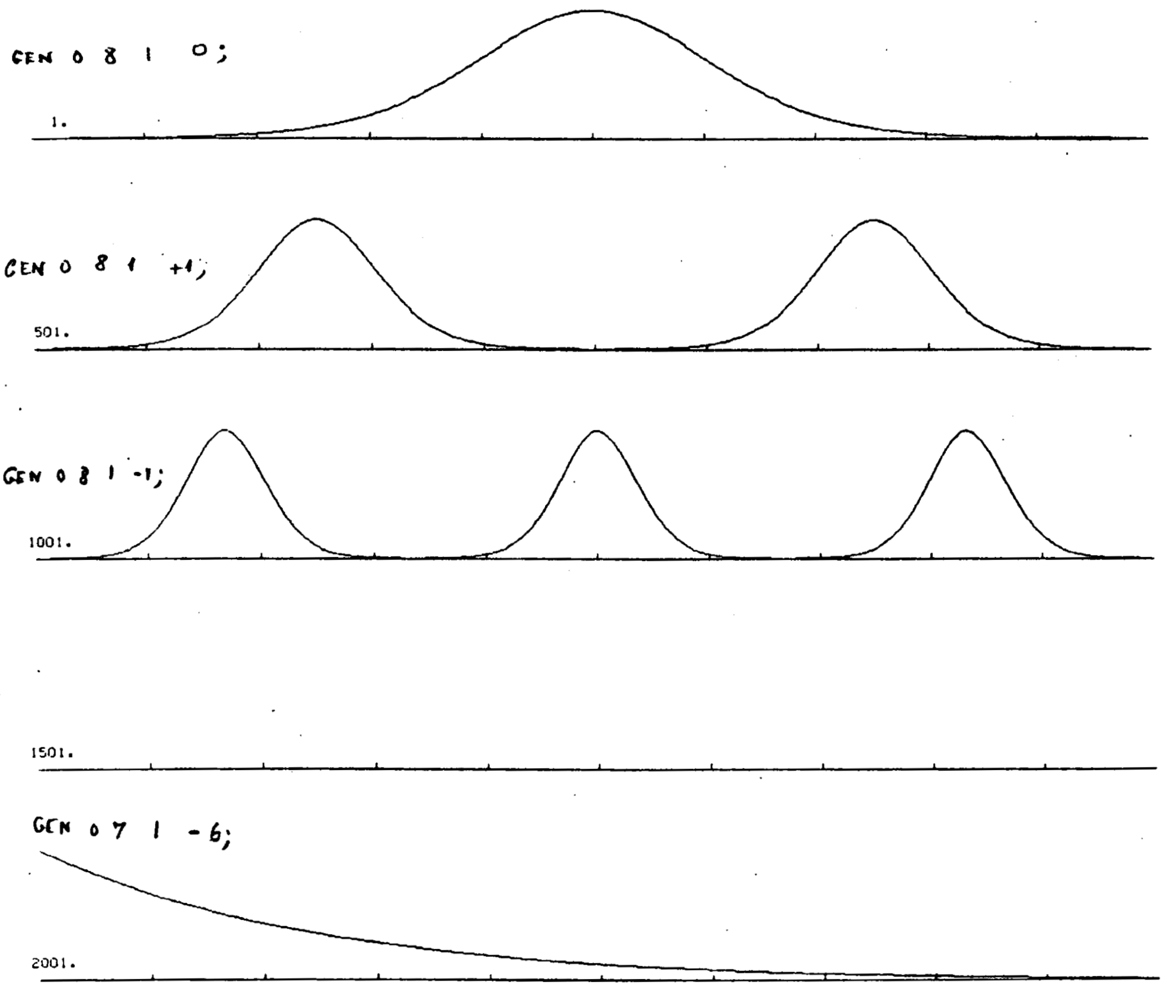

```
CENVGEN8                        GEN8 FOR 1,2,3 PEAK CURVES
C                                          *******
C       FOR TONE HEIGHT VERSUS TONALITY STUDY
C       P(5) ZERO     ONE PEAK
C       P(5) POSITIVE    TWO PEAKS
C       P(5) NEGATIVE     THREE PEAKS
        SUBROUTINE GEN8
        DIMENSION I(15000),P(100),IP(20),A(7000)
        COMMON I,P/PARM/IP
        EQUIVALENCE(I,A)
        SCLFT=IP(15)
        N1=IP(2)+(IFIX(P(4))-1)*IP(6)
        N2=N1+IP(5)-1
        DO 100 K=N1,N2
  100   A(K)=0.0
        IF(P(5))200,250,300
C       THREE PEAKS
  200   CONTINUE
        XM=-P(5)
        DO 225 J=N1,N2
        XJ=J-N1+1
        YJ  =(6.2832*(XJ-44.))/170.
        ZJ  = ALOG(.008)*(1.-SIN(YJ))*.5*XM
        A(J)=EXP(ZJ)
  225   I(J)=A(J)*SCLFT
        GOTO500
C       ONE PEAK
  250   CONTINUE
        XM=P(6)
        IF(XM.EQ.0.)XM=1.
        DO275 J=N1,N2
        XJ=J-N1+1
        YJ  =(6.2832*(XJ-256.5))/511.
        ZJ=ALOG(.008)*(1.-COS(YJ))*.5*XM
        A(J)=EXP(ZJ)
  275   I(J)=A(J)*SCLFT
        GOTO500
C       TWO PEAKS
  300   CONTINUE
        XM=P(5)
        DO325 J=N1,N2
        XJ=J-N1+1
        YJ  =(6.2832*(XJ-65.))/256.
        ZJ  = ALOG(.008)*(1.-SIN(YJ))*.5*XM
        A(J)=EXP(ZJ)
  325   I(J)=A(J)*SCLFT
  500   RETURN
        END
```

#100

This is a melody played by an instrument reminding of a flute.

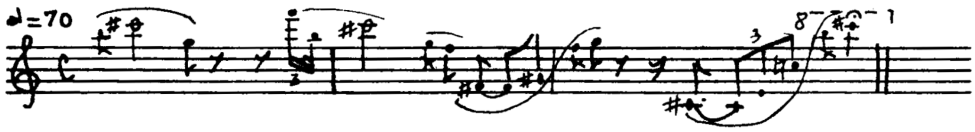

Instrument #2

This instrument gives a wave with a time envelope, a random amplitude modulation and a periodic smplitude modulation.

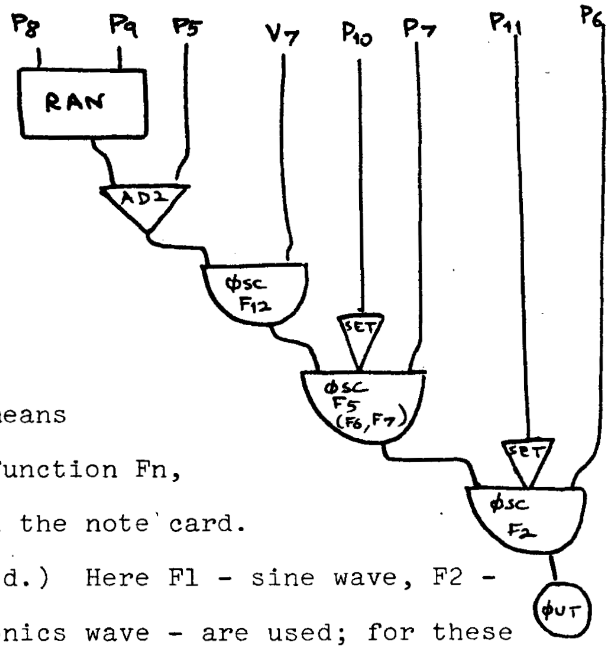

The wave corresponds initially to function F2; by means of SET, it can be changed to function Fn, where n is the value of P11 in the note card. (If n ≤ o no change is effected.) Here F1 - sine wave, F2 - 4 harmonics wave, F3 - 6 harmonics wave - are used; for these 3 functions the fundamental is dominant. The function with the richest harmonic content is used for the lowest note. Care is taken to avoid foldover, except at action time 9 and 9.1 where a small amount of foldover is deliberately introduced. The time envelope corresponds to functions F5 and also F4, F6, F7; it gives slow attack and decay.

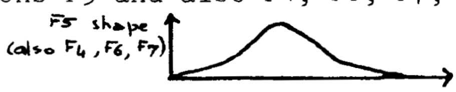

The random amplitude modulation range is only 1% of the amplitude, (see CØNVT), and its rate is around 60Hz. This modulation is only marginally significant.

The periodic amplitude modulation is performed using function F12, giving a sine wave with a D.C. bias. The rate is given by V7 and is around 5Hz. Both F12 and V7 are changed in the course to the melody, (similarly to other parameters) to give more naturalness to the melody.

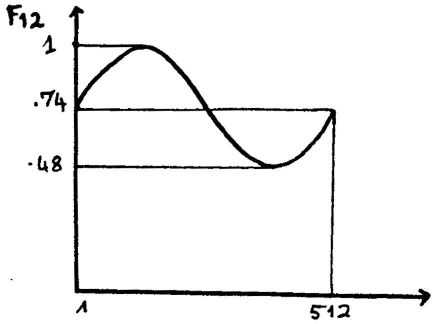

Instrument #3

This instrument is simply used to introduce frequency glides controlled by F9, or to increase the proportion of fundamental (in conjunction with instrument 2).

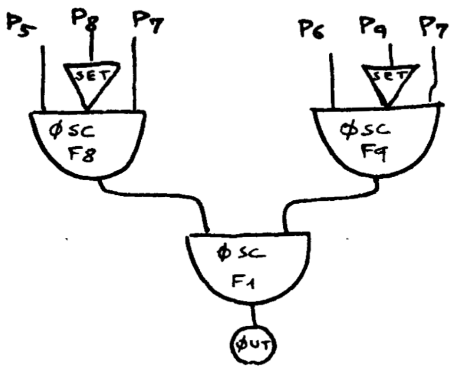

Note: Since only this example was to be generated with this type of tone quality, I have not attempted to improve the code in terms of economy of specification.

\# 100

```
COMMENT  FLUTE RUN ON TAPE M1669 FILE 6;  GEN 0 5 5;
COMMENT:SAMPLING RATE 10000 HZ; SIA 0 4 10000;
COMMENT:INSTRUMENTS FOR FLUTE LIKE TONES;
INS 0 2;RAN P8 P9 B3 P30 P29 P28;AD2 B3 P5 B3;
OSC B3 V7 B3 F12 P25; SET P10;
OSC B3 P7 B3 F5 P27;SET P11;OSC B3 P6 B3 F2 P26;OUT B3 B1;END;
INS 0 3;SET P8;OSC P5 P7 B3 F8 P30;SET P9;OSC P6 P7 B4 F9 P29;
OSC B3 B4 B3 F1 P28;OUT B3 B1;END;
COMMENT:METRONOME MARKING 70;
SV2 0 2 30;SV2 0 30 0 70 20 70;
SV3 0 7 .24;
GEN 0 2 1 1 1;
GEN 0 2 2 1 .2 .08 .07 4;
GEN 0 2 3 1 .4 .2 .1 .1 .05 6;
GEN 0 1 4 0 1 .2 50 .6 140 .99 180 .9 205 .5 250 .25 300 .12 350 .06 400
 .03 450 0 512;
GEN 0 1 5 0 1 .2 50 .6 150 .99 200 .2 350 0 512;
GEN 0 1 6 0 1 .2 50 .5 250 .2 350 0 512;
GEN 0 1 7 0 1 .5 80 .5 140 .99 160 .4 280 .6 420 0 512;
GEN 0 1 8 0 1 .4 150 .99 350 .5 400 .24 450 0 512;
GEN 0 1 9 .895 1 .99 512;
GEN 0 1 10 .999 1 .999 512;
GEN 0 2 12 .26 .74 1;
NOT .88 3 .12 1200 988 .12 8 10;
NOT 1 2 2 800 1109 2 20 60;
GEN 1 1 8 0 1 .99 100 0 512;
NOT 1 3 .7 300 1107 .7 8 10;
GEN 3 2 12 .3 .6 1;
NOT 3 2 .8 300 784 .5 30 50 4;
NOT 4.5 3 .375 1200 1397 .375 5;
NOT 4.85 3 .15 1200 992 .15;
NOT 5 3 .7 300 1100 .7;
NOT 5.01 2 2 1200 1109 2 30 80 6 2;
NOT 7 2 .2 400 784 .2 40 70 7;
NOT 7.2 2 .3 300 698 .3 30 60 5;
NOT 7.51 2 1 300 370 1 30 50 6 2;
NOT 7.5 3 .5 150 368 .5 8;
NOT 8.5 2 .5 400 415 .5 50 60 5;
NOT 9 2 .12 900 1396 .6 30 80 4 2;
NOT 9.1 2 1.2 900 1568 .8 30 90 4 2;
SV3 10.24 7 .31;
NOT 10.25 2 1.08  900 277 1.08 40 60 7 3;
SV3 12.08 7 .28;
NOT 10.25 3 1 200 275 1 6 10;
NOT 11.35 2 .36 500 329 .31 30 60 5 2;
NOT 11.72 2 .36 800 528 .26 30 60 5 2;
NOT 12.09 3 .20 950 2217 .2 6 9;
NOT 12.10 2 .15 700 1975 .13 40 90 5 1;
NOT 12.23 2 2.5 999 2217 1 40 90 4 1;
TER 19;
C          CONVT FOR FLUTE
      SUBROUTINE CONVT
      COMMON IP(10),P(100),G(1000)
      IF(P(1).NE.1.)GOTO100
      F=511./G(4)
      P(6)=F*P(6)
      P(7)=F/P(4)
      IF(P(3).EQ.3.)GOTO100
      P(9)=F*P(9)
      P(8)=.01*P(5)
  100 RETURN
      END
```

#150

This run gives a serial excerpt. It makes use of three different tone qualities, particularly one obtained through non-linearity which has some similarity with clarinet sounds. The 12-tone development is done automatically in the 3rd pass, by repeated scanning of stored functions: frequency controlling functions, corresponding to the pitch rows, and amplitude controlling functions, corresponding to rhythm and accent rows; this way hundreds of musical notes are generated from only 10 note cards, using a process similar to M. V. Mathews' cyclic algorithm but performed in the 3rd pass(6).

The example uses two pitch rows, specified respectively by F7 and F8. The frequency input of the oscillators using these functions is the frequency of the highest note in the row. The rows are as follows:

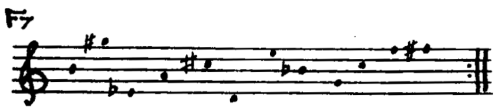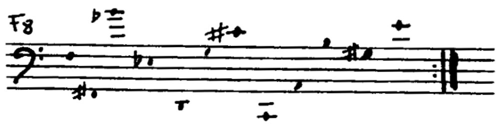

The example uses two rhythm rows, specified by F5 and F6. For instance F5 corresponds to the following rhythm:

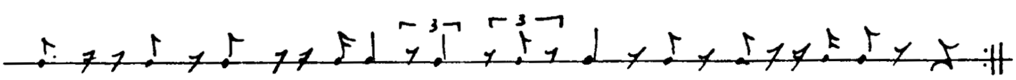

The tempo is ♩ = 132 for a scanning duration of 5.91s.

The oscillators IØS using F5, F6, F7, F8 accept negative increments that will cause the function to be scanned backwards.

Instrument #1 is diagrammed here. A sine wave F1 is amplitude and frequency controlled by functions F5 and F6 respectively, and then submitted to a non-linear transfer, according to the characteristics of function F2. F2×P5 gives the output as a function of the input B3, which must be in the interval -256,+256. This is achieved by using the bottom oscillator in a degenerate way, whereby B3 is used as sum with a frequency increment of 0(V1=0). Both P9 and P5 determine the maximum amplitude, but the value of P9 (in the interval -256,+256) determines the amount of "distortion" performed on the sine wave. (The output is still a sine wave if

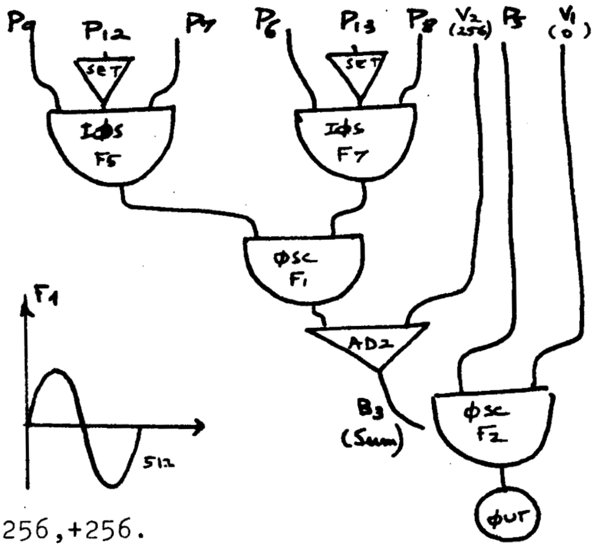

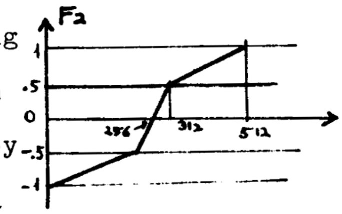

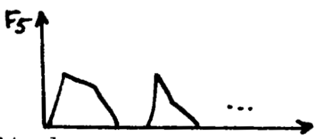

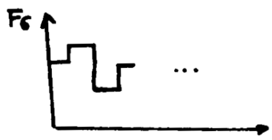

P9<312-256 = 56.) The distortion generates odd harmonics so that a sampling rate of 20,000 Hz had to be used to avoid objectionable foldover for fundamental frequencies around 1500 Hz.

Instrument #2 simply generates a waveform defined by F3, amplitude and frequency controlled respectively by functions F6 and F8. F3 is an all-positive waveform, generated by GEN7 (cf. description): it is a sine wave in a dB scale, with the lowest point 84 dB below the highest point. There is a marked difference between the aural effect of this wave and that of a true sine wave.

Instrument #3 generates a sine wave whose frequency is controlled by F7 and whose amplitude is controlled by F4. F4 is a decaying exponential: this gives a percussive sound. The rate of scanning the amplitude function is about 12 times the

rate of scanning the frequency function: if it were exactly that, it would give one "stroke" per pitch. By divorcing the rates of scanning for amplitude and for frequency functions, one can obtain repeated pitches or legato transitions between pitches.

Note: In the printout for run #150, semicolons (;) are replaced by dollar signs ($). (This run was performed on a machine without a (;) in the character set.) Also GEN1 is for this example defined with abscissas ranging from 0 to 511.

150

```
COMMENT SERIAL FUNCTIONS WITH NON LINEARITYS
COMMENT FCTS SERIELLES  CLAR 1 CELLO 2$
INS 0 1$SET P12$TOS P9 P7 B3 F5 P10$
SET P12$TCS P6 P8 B4 F7 P11$
OSC B3 B4 B3 F1 P30$AD2 B3 V2 B3$
OSC P5 V1 B2 F2 B3$OUT B2 B1$END$
GEN 0 2 1 1 1$
GEN 0 1 2 -.99 0 -.5 200 .5 312 .99 511$
INS 0 2$SET P12$TOS P5 P7 B3 F6 P10$
SET P12$TCS P6 P8 B4 F8 P11$
OSC B3 B4 B3 F3 P30$OUT B3 B1$END$
SV3 0 1 0 256$
GEN 0 7 3 0 1$
GEN 0 1 4 0 0 .2 80 140 .99 250 .8 330 .2 400 0 511$
COMMENT FCTS DE RYTHME PUIS DE PITCH$
GEN 0 1 5 0 0 .99 4 .6 10 0 29 0 58 .7 62 .3 72 0 78 0 97 .4 102 .1
110 0 118 0 147 .9 149 .6 153 .2 156 .8 158 .3 180 0 196 0 203 .3 211
.7 225 .3 230 0 233 0 248 .4 250 .9 255 0 262 0 275 .99 276 0 314 0 334
.8 335 .2 345 0 353 0 373 .99 375 0 393 0 422 .6 423 .1 432 .7 433
.7 440 0 452 0 511$
GEN 0 1 6 0 0 .9 3 .6 50 .2 56 0 58 0 84 .8 85 .9 107 0 114 0 151
.99 155 .3 167 0 171 0 211 .99 213 .3 224 .1 227 .99 231 .6 150 .8 280
.05 284 .5 285 .4 290 .05 292 .6 300 .8 306 0 312 0 381 .6 383 0 397 0
410 .7 415 .2 425 0 440 0 492 .99 496 .6 504 0 511$
GEN 0 1 7 .593 0 .593 42 .99 43 .99 85 .37 86 .37 127 .527 128 .527
 170 .667 171
 .667 212 .351 213 .351 255 .790 256 .790 298 .555 299 .555 340
.468 341 .468 383 .624 384 .624 425 .832 426 .832 468 .889 469 .889
510 .593 511$
GEN 0 1 8 .375 0 .375 42 .200 43 .200 85 .999 86 .999 127 .333 128
.333 170 .158 171 .158 212 .422 213 .422 255 .601 256 .601 298 .141
299 .141 340 .237 341 .237 383 .534 384 .534 425 .450 426 .450 468
.712 469 .712 510 .375 511$
INS 0 3$OSC P5 P7 B3 F4 P30$TCS P6 P8 B4 F7 P29$
OSC B3 B4 B3 F1 P28$OUT B3 B1$END$
GEN 0 7 4 -9$
STA 0 4 20000$
COMMENT TO SET GENERAL CONVT$
SV2 0 10 3 6 -7 -8$
SV2 0 20 3 6 -7 -8$
SV2 0 30 3 6 -7 -8$
NOT 1 1 11.82 250 1640 11.82 10.90 250$
NOT 24.62 1 23.64 200 1640 -11.82 -10.90 250$
NOT 36.44 1 11.82 250 2304 11.82 10.90 250$
NOT 3.72 2 16.32 800 228 8.16 10.90$
NOT 6.45 1 29.6 450 820 5.91 -5.45 220$
NOT 6.45 1 29.6 400 576 2.955 -5.45 200$
NOT 24 2 16.32 300 455 -16.32 -10.90$
NOT 24 1 23.64 400 820 -11.82 10.90 250$
NOT 30 2 16.32 800 228 8.16 10.90$
NOT 30 3 22 500 6560 .92 11$
TER 54$
```

#200

This run provides a few "brass-like" tones. Here no attempt has been made towards economy of specification: schematized data from real trumpet tones have been used (cf., J. C. Risset and M. V. Mathews, Physics Today, Feb.1969).

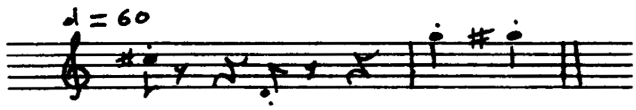

Instrument #1

This is a degenerate instrument which simply provides for random frequency modulation in the other instruments. The range is around .5% of the fundamental frequency; the rate is around 10Hz. (These are low values: in this example the random modulation is not very significant.)

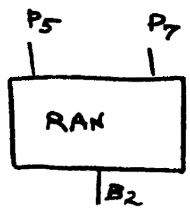

Instruments #2, 3, ..., 6

These instruments are used to synthesize tones with different envelopes for each partial: 1st partial with function F2, ..., 5th partial with function F6. Random frequency modulation is possible using instrument #1. F1 is a sine wave.

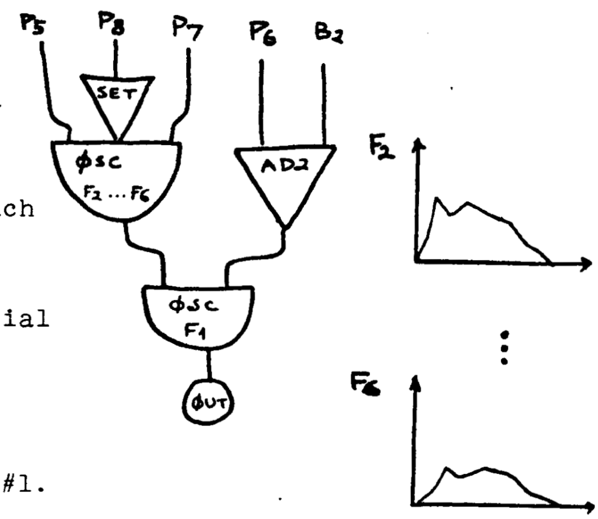

Instrument #7

This instrument is used to synthesize partials with different attacks and decay.

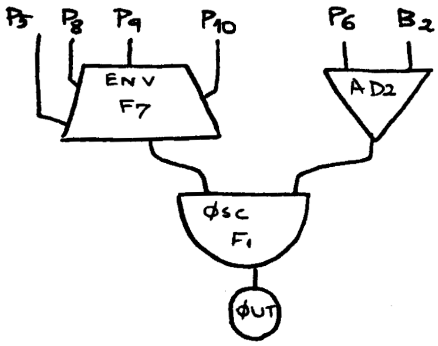

#200

```
COMMENT:BRASSY TONES WITH INDEPENDENT CONTROL OF THE HARMONICS;
COMMENT:TAPE M2029;
COMMENT:SAMPLING RATE 12.5 KC;
COMMENT:FOR FREQUENCY MODULATION AT RANDOM;
INS 0 1;RAN P5 P7 B2 P30 P29 P28;END;
COMMENT:FOR INDEPENDENT HARMONIC CONTROL;
INS 0 2;SET P8;OSC P5 P7 B3 F2 P30;
AD2 P6 B2 B4;OSC B3 B4 B3 F1 P29;OUT B3 B1;END;
INS 0 3;SET P8;OSC P5 P7 B3 F3 P30;
AD2 P6 B2 B4;OSC B3 B4 B3 F1 P29;OUT B3 B1;END;
INS 0 4;SET P8;OSC P5 P7 B3 F4 P30;
AD2 P6 B2 B4;OSC B3 B4 B3 F1 P29;OUT B3 B1;END;
INS 0 5;SET P8;OSC P5 P7 B3 F5 P30;
AD2 P6 B2 B4;OSC B3 B4 B3 F1 P29;OUT B3 B1;END;
INS 0 6;SET P8;OSC P5 P7 B3 F6 P30;
AD2 P6 B2 B4;OSC B3 B4 B3 F1 P29;OUT B3 B1;END;
COMMENT:FOR ATTACK AND DECAY TIMES;
INS 0 7;ENV P5 F7 B3 P8 P9 P10 P30;AD2 P6 B2 B4;
OSC B3 B4 B3 F1 P29;OUT B3 B1;END;
STA 0 4 12500;
GEN 0 2 1 1 1;
GEN 0 1 2 .001 10 .282 26 .112 40 .178 429 .159 473 .008 500 .001 512;
GEN 0 1 3 .001 19 .500 434 .355 454 .016 490 .001 512;
GEN 0 1 4 .001 23 .560 435 .001 512;
GEN 0 1 5 .001 10 .005 19 .224 418 .224 431 .178 458 .001 512;
GEN 0 1 6 .001 10 .009 21 .089 33 .022 45 .022 73 .112 226 .178 264
.071 345 .062 468 .001 512;
GEN 0 1 7 0 1 .999 128 .999 256 0 384 0 512;
NOT 1 1 .17 .6 554 10;
NOT 1 7 .17 200 554 0 7.5 0 140;
NOT 1 7 .17 160 1108 0 7.5 0 110;
NOT 1 7 .17 350 1662 0 12 0 85;
NOT 1.00 7 .15 310 2216 0 14 0 80;
NOT 1.00 7 .14 160 2770 0 24 0 65;
NOT 1.00 7 .14 200 3324 0 27 0 60;
NOT 1.00 7 .14 99 3878 0 32 0 60;
NOT 1.00 7 .14 200 4432 0 30 0 60;
NOT 1.00 7 .14 80 4986 0 35 0 60;
NOT 3 1 .15 .6 293 10;
NOT 3 7 .15 50 293 0 10 0 140;
NOT 3 7 .15 80 586 0 10 0 110;
NOT 3 7 .15 100 879 0 12 0 85;
NOT 3 7 .15 175 1172 0 17 0 80;
NOT 3 7 .15 180 1465 0 25 0 65;
NOT 3.01 7 .15 150 1758 0 30 0 60;
NOT 3.01 7 .15 100 2051 0 35 0 60;
NOT 3.01 7 .13 80 2344 0 35 0 60;
NOT 3.01 7 .14 50 2637 0 40 0 100;
NOT 3.01 7 .14 60 2930 0 40 0 100;
NOT 3.01 7 .14 140 3223 0 45 0 100;
NOT 3.01 7 .13 90 3516 0 45 0 100;
NOT 3.01 7 .13 45 3809 0 40 0 100;
NOT 3.01 7 .13 25 4102 0 45 0 90;
NOT 5 1 .4 .4 784 20;
NOT 5 2 .4 800 784 0;
NOT 5 3 .4 800 1568 0;
NOT 5 4 .4 800 2352 0;
NOT 5 5 .4 800 3136 0;
NOT 5 6 .4 800 3920 0;
NOT 6.0 1 .7 .4 830 20;
NOT 6.0 2 .7 1400 830 0;
NOT 6.0 3 .7 1000 1660 0;
```

```
NOT 6.0 4 .7 1C00 2490 0;
NOT 6.0 5 .7 1000 3320 0;
NOT 6.0 6 .7 1C00 4150 0;
NOT 6.8 1 .1 0 50 0;
TER 8;
      SUBROUTINE CONVT
      COMMON IP(10),P(100),G(1000)
      IF(P(1).NE.1.)GOTO100
      F=511./G(4)
      P(6)=F*P(6)
      IF(G(10).GE..5)GOTO200
      IF(P(3).EQ.1.)GOTO10
      IF(P(3).EQ.7.)GOTO70
      P(7)=F/P(4)
      GOTO100
 10   P(5)=.01*P(5)*P(6)
      P(7)=F*P(7)
      GOTO100
 70   FENV=F*.25
      P(8)=.001*P(8)
      P(9)=.001*P(9)
      P(10)=.001*P(10)
      P(9)=P(4)-P(8)-P(10)
      IF(P(9))2,3,4
 2    P(8)=(P(8)*P(4))/(P(8)+P(10))
      P(10)=(P(10)*P(4))/(P(8)+P(10))
 3    P(9)=128.
      GOTO5
 4    P(9)=FENV/P(9)
 5    P(8)=FENV/P(8)
      P(10)=FENV/P(10)
      GOTO100
 200  P(6)=P(6)*P(3)*10.
      P(7)=F/P(4)
      FENV=F*.25
      P(8)=.001*P(8)
      P(9)=.001*P(9)
      P(10)=.001*P(10)
      P(9)=P(4)-P(8)-P(10)
      IF(P(9))202,203,204
 202  P(8)=(P(8)*P(4))/(P(8)+P(10))
      P(10)=(P(10)*P(4))/(P(8)+P(10))
 203  P(9)=128.
      GOTO205
 204  P(9)=FENV/P(9)
 205  P(8)=FENV/P(8)
      P(10)=FENV/P(10)
 100  RETURN
      END
```

200, continues

#201

This is the same run as #200, but played back at a sampling rate of 5000Hz instead of 12,500Hz--hence all frequencies are multiplied by .4, all durations are multiplied by 2.5.

#210

This run gives some examples of brass-like sounds synthesized with more economy of specification than in #200, using an instrument designed to produce sounds whose spectra depend upon the amplitude of one component (cf. J. C. Risset and M. V. Mathews, Physics Today, Feb. 1969). It must be noted that this instrument is by no means limited to the production of this type of sounds: the components need not be harmonically related and the functions used can be entirely different.

The instrument (#1) is diagrammed here. The amplitude of one partial (which will be in this example harmonic #1) is controlled by function F8, used with the ENV generator; the

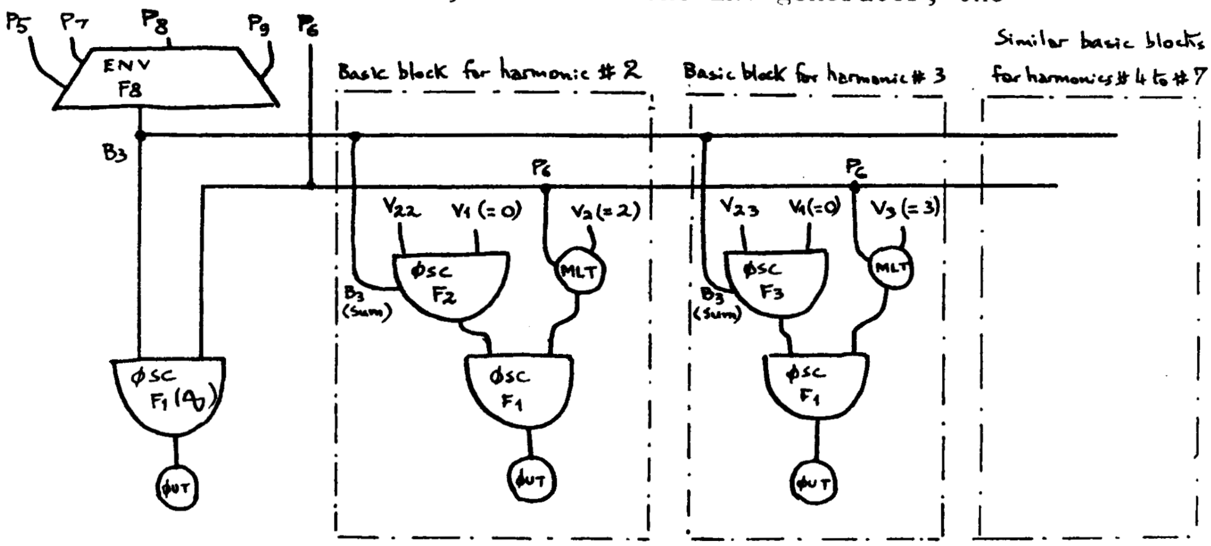

maximum amplitude of this component is determined by P5, and has to be smaller than 512. The output of the ENV generator is input-output block B3. B3 is used as amplitude input of the oscillator generating the contribution of harmonic #1, and also for another purpose. Hence B3 has to be reserved in this instrument, it cannot for example be used as output for another oscillator. For each harmonic, B3 is used as sum for an oscillator with a frequency increment of 0 (V1 = 0), which performs simply as a function look-up unit. E.g., for harmonic #2 the output of this oscillator will be the product of V22 by the value of stored function F2 for an abscissa equal to the current value stored in B3 (e.g., the current value of the output of the ENV generator); this output is stored into B4 and used as amplitude input for the oscillator generating the contribution of harmonic #2--the frequency input being the produce of the fundamental frequency P6 by the constant V2 = 2. Hence the value of the amplitude of harmonic #2 is a prescribed function of the amplitude of harmonic #1 (this function being determined by V22 and by F2). Similar basic blocks of unit generators give, in a similar way, the amplitude of each harmonic as a prescribed function of the amplitude of harmonic #1. Hence the spectrum of the sound depends upon the amplitude of harmonic #1.

Fundamental frequency is given in Hz by P6. Attack time and decay time are given in s by P7 and P9; the CØNVT subroutine computes the steady state time as P4-P7-P9.

The example includes two sections, which differ by the constants V22,..., V28 and the functions F2, ..., F7 used with the instrument. Hence the way the spectrum depends upon the amplitude of harmonic #1 is different in the two sections; however in both sections it retains one important characteristic of brassy tones, namely the fact that the proportion of high frequency energy increases with the intensity of the sound.

In the first section functions F2 to F7 are as plotted (Plot attached). All functions have value .05 for abscissa 50: when 1st harmonic's amplitude is 50, 2nd harmonic's amplitude is V22 × .05, (in this case 1000 × .05 = 50), 3rd harmonic's amplitude is V23 × .05, and so on. Thus when P5 = 50, the amplitude of the successive harmonics are proportional to 1000, V22, V23, ... When P5 increases from value 50, due to the functions used the contributions of harmonics #2, 3, ..., 7 increase respectively 2, 3, ..., 7 times as fast. Overloading (peak amplitude higher than 2048) occurs when P5 is between 80 and 90. So the useful range for P5 is from 0 to 80 (but the sound is sinusoidal for P5 < 33).

The first sound is a long tone with dynamics represented by sf-p-cresc, to illustrate how the spectrum brightens when the amplitude increases. Then follow 9 short sounds of varied amplitude, with a large amplitude overshoot at the beginning of the sound. The attack time used is 50 ms (larger than in most actual trumpet sounds--because of the unusual way the harmonics come in).

In the second section, slightly different functions F2 and F3 and different values for V22 to V27 are used. The section comprises five sustained notes and one crescendo note.

It is useful to add to the instrument a MLT generator to scale the output by a factor specified on the note card: this permits for example to have the instrument played by several voices, with P5 = 80 for each of them, without overloading. (Merely reducing the value of P5 for each voice would change the spectrum.)

The sounds of this example are not presented as good imitations of trumpet sounds: the spectrum is not reproduced accurately and in particular there is no formant structure; there are not enough components, and there is no frequency control. (Both formant structure and frequency control could of course be incorporated in this type of instrument.) On the other hand, using this type of control of the spectrum, one can obtain somewhat "brassy" sounds with only 3 functions, one controlling harmonics 2 and 3, the second one controlling 4 and 5, and the third one controlling 6 and 7. Also, as mentioned before, the utility of this type of spectrum variation is not limited to brass-like sounds.

Note: In the printout for run #210, semicolons (;) are replaced by dollar signs ($). (This run was performed on a machine without a ; in the character set.) Also GEN1 is for this example defined with abscissas ranging from 0 to 511.

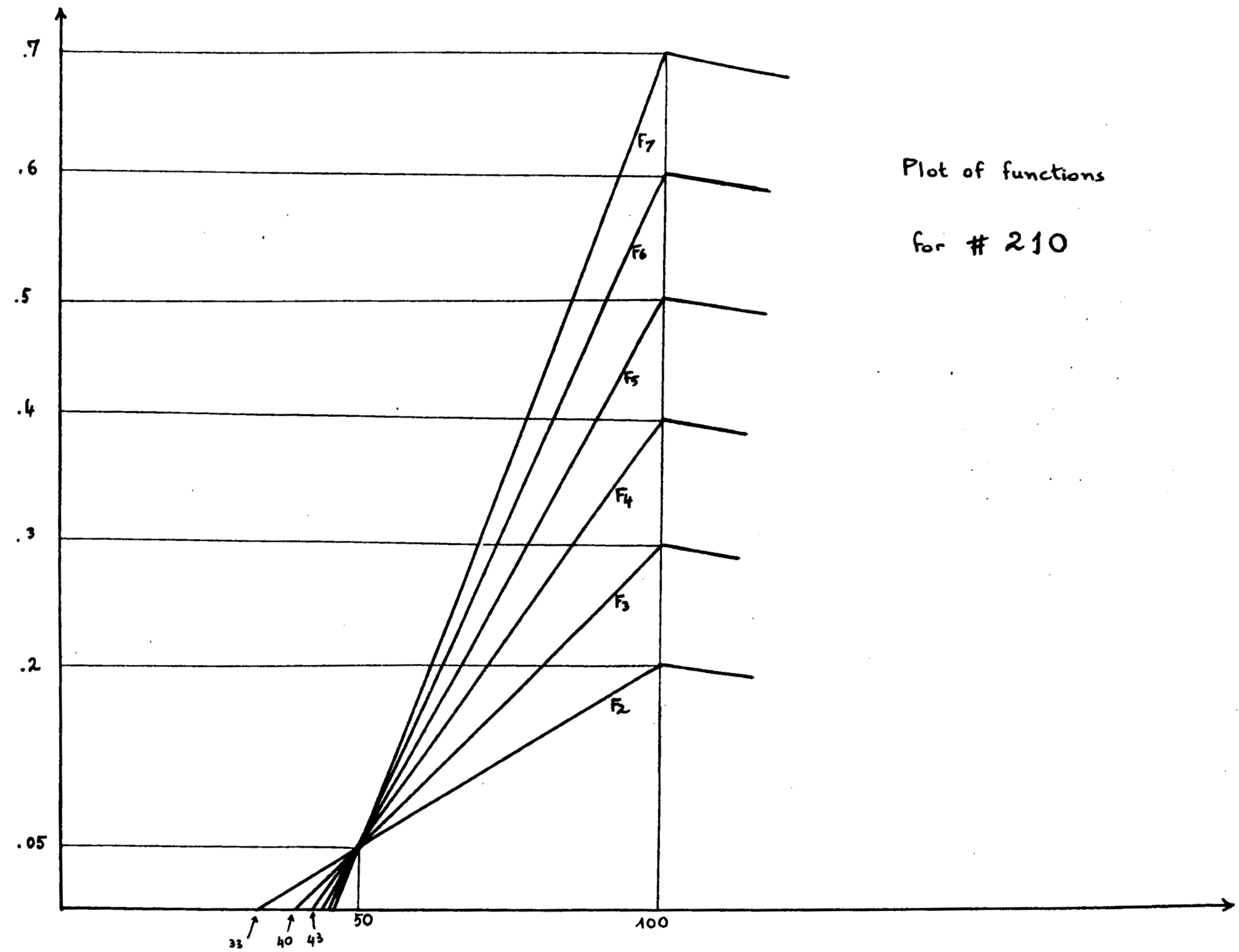

Plot of functions

for # 210

210

```
COMMENT SIMPLIFIED BRASSY SOUNDS$
INS 0 1$ENV P5 F8 B3 P7 P8 P9 P30$OSC B3 P6 B4 F1 P29$OUT B4 B1$
OSC V22 V1 B4 F2 B3$MLT P6 V2 B5$OSC B4 B5 B4 F1 P27$OUT B4 B1$
OSC V23 V1 B4 F3 B3$MLT P6 V3 B5$ODC B4 B5 B4 F1 P25$OUT B4 B1$
OSC V24 V1 B4 F4 B3$MLT P6 V4 B5$OSC B4 B5 B4 F1 P23$OUT B4 B1$
OSC V25 V1 B4 F5 B3$MLT P6 V5 B5$OSC B4 B5 B4 F1 P21$CUT B4 B1$
OSC V26 V1 B4 F6 B3$MLT P6 V6 B5$OSC B4 B5 B4 F1 P19$OUT B4 B1$
OSC V27 V1 B4 F7 B3$MLT P6 V7 B5$OSC B4 B5 B4 F1 P17$OUT B4 B1$END$
COMMENT TO SET GENERAL CONVT$ SV2 0 10 2 6 107$
SV3 0 1 0 2 3 4 5 6 7$
SV3 0 22 1000 2000 1900 1250 1000 850$
GEN 0 2 1 1 1$
GEN 0 1 2 0 0 0 33 .2 100 0 511$GEN 0 1 3 0 0 0 40 .3 100 0 511$
GEN 0 1 4 0 0 0 43 .4 100 0 511$GEN 0 1 5 0 0 0 45 .5 100 0 511$
GEN 0 1 6 0 0 0 46 .6 100 0 511$GEN 0 1 7 0 0 0 46 .7 100 0 511$
GEN 0 1 8 0 0 .5 128 .999 256 0 384 0 511$
NOT 1 1 5 90 554 .05 5 .25$
GEN 7 1 8 0 0 .99 100 .65 110 .8 128 .6 256 .3 300 0 383 0 511$
NOT 8.5 1 .3 45 554 .05 0 .1$
NOT 9 1 .3 50 554 .05 0 .1$
NOT 9.5 1 .3 55 554 .05 0 .1$
NOT 10 1 .3 80 554 .05 0 .1$
NOT 10.5 1 .3 60 554 .05 0 .1$
NOT 11 1 .2 65 554 .05 0 .1$
NOT 11.5 1 .2 70 554 .05 0 .1$
NOT 12 1 .2 75 554 .05 0 .1$
NOT 12.5 1 .3 80 554 .05 0 .1$
SEC 14$
SV3 0 22 4000 5000 2400 4000 1000 5000$
GEN 0 1 2 0 0 0 33 .05 50 .110 100 0 511$
GEN 0 1 3 0 0 0 40 .05 50 .120 100 0 511$
GEN 0 3 8 0 45 85 0 0$
NOT 1 1 .6 50 682 .05 .4 .15$
NOT 2 1 .6 60 682 .05 .4 .15$
NOT 3 1 .6 70 682 .05 .4 .15$
NOT 4 1 .6 80 682 .05 .4 .15$
NOT 5 1 3 85 682 .05 3 .2$
TER 9$
```

#250

This run gives an example of how the same waveshape can give different tone qualities, depending upon the amplitude envelope; here are presented sounds which could be described as "reedy" (like oboe or bombarde sounds) or "plucked" (like harpsichord sounds). Also an example of "choral effect" is given.

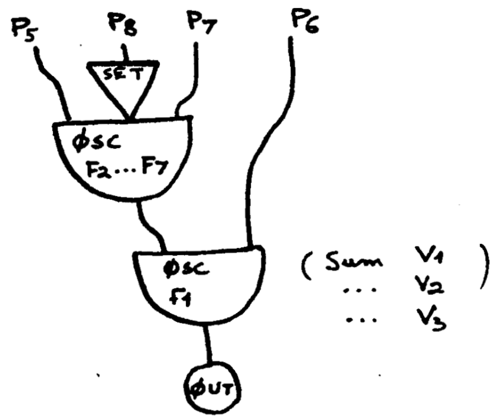

Instruments #1, 2, 3

These instruments are diagrammed here. They give waveshape F1 with an envelope defined by functions F2 to F7. The sum of the waveshape oscillator is stored in a Pass III variable: this permits click-free "legato" transitions between successive notes (that is, transitions where the amplitude does not go to 0 at the end or the beginning of the note).

Instruments #1, 2, 3 are defined by functions F2, F3 and F2 respectively for the envelope: but these function numbers can be modified in the note card, using SET. The functions used insure long attacks and decays (longer than 50 milliseconds) and "legato" transitions between successive notes.

Function F1 comprises 11 harmonics. This same function is used in instrument #4.

The first section plays an excerpt of a Brittany folk melody with one voice (produced by instrument #1). The scale is not equally tempered; the leading tone is conspicuously low. The tone quality reminds of a double reed instrument.

The second section plays a similar melody, but with three voices played by instruments 1 to 3. The frequency and time differences between the voices (up to a several per cent difference in frequency and up to .08s in time) somewhat evocates the sound of a number of players (choral effect). (From a single voice, the additional voices note cards could be generated automatically by use of a simple PLF subroutine.)

The third section plays a related melody with the same waveshape F1 but with a short (exponential) attack and an exponential decay. This section uses instrument #4, diagrammed here. Function F8 gives an exponential attack and decay between 1 and 2^{-9}.

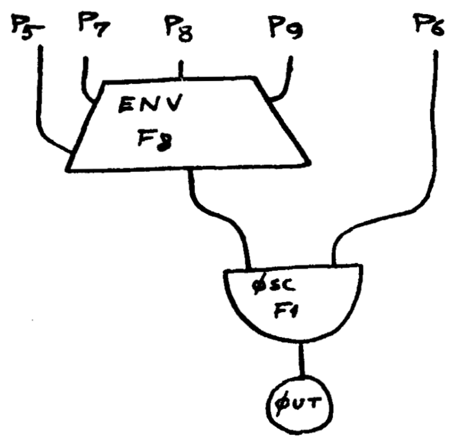

The notes of this section have no steady state, an exponential attack time of 10 milliseconds which corresponds to a very sharp attack, and an exponential decay time varying between .5s and 2s. The tone quality reminds of a plucked string instrument.

250

```
COMMENT:SAME SPECTRUM FOR REEDY AND PLUCKED SOUNDS;
COMMENT:SAMPLING RATE 20 KC;        SIA 0 4 20000;
INS 0 1;SET P8;OSC P5 P7 B3 F2 P30;OSC B3 P6 B3 F1 V1;OUT B3 B1;END;
INS 0 2;SET P8;OSC P5 P7 B3 F3 P30;OSC B3 P6 B3 F1 V2;OUT B3 B1;END;
INS 0 3;SET P8;OSC P5 P7 B3 F2 P30;OSC B3 P6 B3 F1 V3;OUT B3 B1;END;
INS 0 4;ENV P5 F8 B3 P7 P8 P9 P30;OSC B3 P6 B3 F1 P29;OUT B3 B1;END;
COMMENT:TO SET GENERAL CONVT;
SV2 0 10 2 6 -7;
SV2 0 20 2 6 -7;
SV2 0 30 2 6 -7;
SV2 0 40 2 6 107;
GEN 0 2 1 40 30 35 50 10 20 15 0 2 5 3 11;
GEN 0 3 2 0 10 8 6 7 6;
GEN 0 3 3 0 7 8 10 5 5;
GEN 0 1 4 .6 0 .9 120 .7 300 .8 400 .6 512;
GEN 0 1 5 .5 0 .6 240 .5 512;
GEN 0 1 6 .6 0 .9 20 .3 320 0 512;
GEN 0 1 7 .5 0 .8 40 .2 300 0 512;
GEN 0 6 8 9 .99 .99 9;
COMMENT:BREIZ BOMBARDE TYPE;
COMMENT:ONE SINGLE VOICE;
NOT 1 1 .5  600 486 .5;NOT 1.5 1 .25  600 615 .25 4;
NOT 1.75 1 .25  600 648 .25;NOT 2 1 .5  600 729 .5;
NOT 2.5 1 .25  600 972 .25;NOT 2.75 1 .25  600 890 .25;
NOT 3 1 .25  600 820 .25;NOT 3.25 1 .25  600 729;
NOT 3.5 1 .5  600 820 .5;NOT 4 1 2  600 729 2 6;
SEC 7;
COMMENT:THREE VOICES FOR CHORAL EFFECT;
NOT 1 1 .5 1200 486 .5 2;NOT 1.03 2 .5 500 492 .5 3;
NOT 1.08 3 .5 300 473 .5 2;
NOT 1.5 1 .25 1200 615 .25 4;NOT 1.53 2 .25 500 610 .25 5;
NOT 1.58 3 .25 300 629 .25 4;
NOT 1.75 1 .25 1200 648 .25;NOT 1.78 2 .25 500 660 .25;
NOT 1.83 2 .25 500 625 .25;
NOT 2 1 .5 1200 729 .5;NOT 2.03 2 .5 500 719 .5;
NOT 2.08 3 .5 300 741 .5;
NOT 2.5 1 .25 1200 972 .25;NOT 2.53 2 .25 500 990 .25;
NOT 2.58 3 .25 300 950 .25;
NOT 2.75 1 .25 1200 890 .25;NOT 2.78 2 .25 500 880 .25;
NOT 2.83 3 .25 300 884 .25;
NOT 3 1 .25 1200 820 .25;NOT 3.03 2 .25 500 830 .25;
NOT 3.08 3 .25 300 809 .25;
NOT 3.25 1 .25 1200 820 .25;NOT 3.28 2 .25 500 835 .25;
NOT 3.33 3 .25 300 807 .25;
NOT 3.5 1 .5 1200 820 .5;NOT 3.53 2 .5 500 848 .5;
NOT 3.58 3 .5 300 800 .5;
NOT 4 1 2 1200 729 2 6;NOT 4.03 2 1.99 500 722 1.99 7;
NOT 4.08 3 1.92 300 743 1.97 6;
SEC 8;
COMMENT:PLUCKED SOUND;
NOT 1 4 .5 600 486 .01 0 2 ;NOT 1.5 4 .25 700 615 .01 0 1 ;
NOT 1.75 4 .25 700 648 .01 0 1 ;
NOT 2 4 1 600 486 .01 0 2;NOT 2 4 1 600 615 .01 0 1.5;
NOT 2 4 1 600 729 .01 0 1.5;
NOT 2.5 4 .50 700 1944 .01 0 .9;NOT 2.75 4 .50 700 1728 .01 0 .9;
NOT 3 4 .25 700 1640 .01 0 .5;NOT 3.25 4 .25 700 1458 .01 0 .5;
NOT 3.5 4 .5 700 1640 .01 0 1 ;NOT 4 4 .9 600 1458 .01 0 1 ;
NOT 4 4 .8 600 1230 .01 0 1 ;NOT 4 4 .9 600 731 .01 0 1 ;
TER 6;
```

#300

This run compares different decays.

Instrument #1 is diagrammed here.

All 4 instruments are similar, they only differ by the function numbers. (For simultaneous voices, one cannot use the same instrument with different functions; for successive notes one could redefine the function or use SET unit generator.)

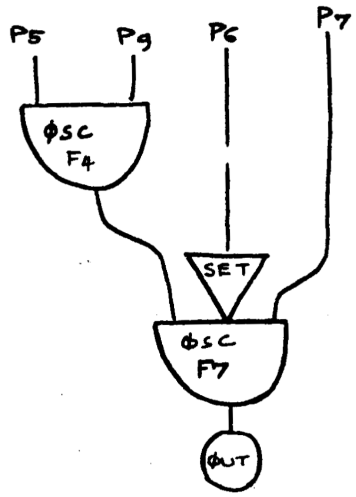

The first section compares linear and exponential decay.

Linear decay is controlled by function F4:

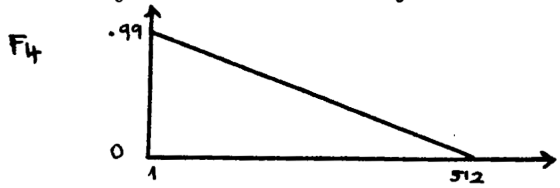

Exponential decay is controlled by function F5:

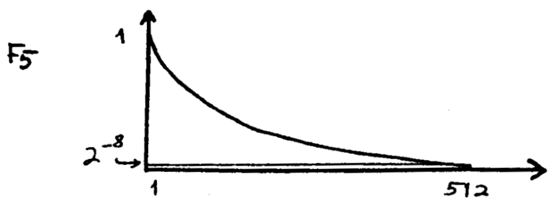

1st note: linear decay, duration 2s

2nd note: exponential decay, duration 2s

3rd note: linear decay, duration 2s

4th note: exponential decay, duration 4s

(Linear decay seems to decay slowly then suddenly disappears; exponential decay is more even and gives a resonance impression.

The beginning of a linear decaying note is comparable with the beginning of an exponentially decaying note of longer duration.)

Note: 2^{-8}=1/256. To get an uncut exponential decay, one should make sure that the amplitude controlling function decays to a final value not larger than the inverse of the maximum amplitude used, since when the amplitude is smaller than one sample, the sound is lost in the quantizing noise. (E.g., if maximum amplitude is 1500, one should have a function decaying to 2^{-11}=1/2048.)

The following notes consist of 3 waveshapes--F6, F7, F8--decaying at different rates; in this order:

5) all 3 waveshapes at same frequency 440, longest decay for component with least high frequency content (a "natural" situation, since high frequencies decay faster in pianos, bells...);
6) same as previously, except that components have slightly different frequencies 443, 440, 441--to give beats similar to those due to inharmonicity (or bad tuning) in piano sounds;
7) all 3 waveshapes at frequency 440, with the unnatural situation of having component with more high frequency energy decaying slower;
8) same as previously, with component frequencies 443, 440, 441;

9) same as 5)

10) same as previously, with exaggerated differences in component frequencies (448, 444, 440).

300

```
COMMENT:DECAY STUDY ON TAPE M2804;
INS 0 1;OSC P5 P9 B3 F4 P30;SET P6;OSC B3 P7 B3 F7 P29;OUT B3 B1;END;
INS 0 2;OSC P5 P9 B3 F5 P30;SET P6;OSC B3 P7 B3 F6 P29;OUT B3 B1;END;
INS 0 3;OSC P5 P9 B3 F5 P30;SET P6;OSC B3 P7 B3 F7 P29;OUT B3 B1;END;
INS 0 4;OSC P5 P9 B3 F5 P30;SET P6;OSC B3 P7 B3 F8 P29;OUT B3 B1;END;
GEN 0 1 4 .99 1 0 512;
GEN 0 7 5 -8;
GEN 0 3 6 0 10 10 10 0 -10 -10 -10 0;
GEN 0 2 7 1 .5 .3 .2 .15 .12 6;
GEN 0 2 8 1 .2 .05 3;
COMMENT:TO SET GENERAL CONVT;
SV2 0 10 2 7 -9;
SV2 0 20 2 7 -9;
SV2 0 30 2 7 -9;
SV2 0 40 2 7 -9;
COMMENT:TWICE LINEAR THEN EXPONENTIAL DECAY  ONE COMPONENT ONLY;
NOT 1 1 2 1700 7 440 0 2; NOT 4 3 2 1700 7 440 0 2;
NOT 7 1 2 1700 7 440 0 2;NOT 9 3 4 1700 7 440 0 4;
SEC 15;
COMMENT:TRIPLE DECAY;
NOT 1 2 .1 1000 6 440 0 .1;
NOT 1 3 1.8 350 7 440 0 1.8;
NOT 1 4 3 200 8 440 0 4;
SEC 5;
NOT 1 2 .1 1000 6 443 0 .1;
NOT 1 3 1.8 350 7 440 0 1.8;
NOT 1 4 3 200 8 441 0 4;
SEC 5;
NOT 1 4 .1 1000 8 440 0 .1;
NOT 1 3 1.8 350 7 440 0 1.8;
NOT 1 2 3 200 6 440 0 4;
SEC 5;
NOT 1 4 .1 1000 8 443 0 .1;
NOT 1 3 1.8 350 7 440 0 1.8;
NOT 1 2 3 200 6 441 0 4;
SEC 5;
NOT 1 2 .1 1000 6 440 0 .1;
NOT 1 3 1.8 350 7 440 0 1.8;
NOT 1 4 3 200 8 440 0 4;
SEC 5;
NOT 1 2 .1 1000 6 448 0 .1;
NOT 1 3 1.8 350 7 440 0 1.8;
NOT 1 4 3 200 8 444 0 4;
TER 5;
```

#301

This run plays this motive with a sound reminding of a piano.

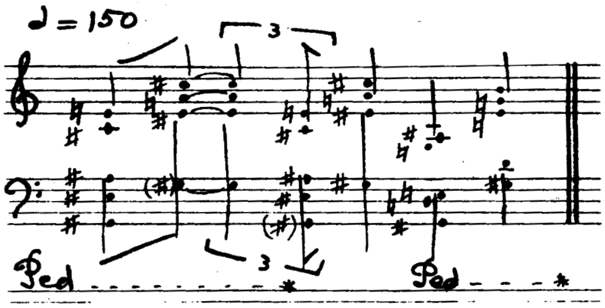

For this run, 4 kinds of notes are distinguished and treated differently:

1)brief and low notes played on instrument #1.
(duration $\lesssim$.2s, frequency $\lesssim$250Hz)

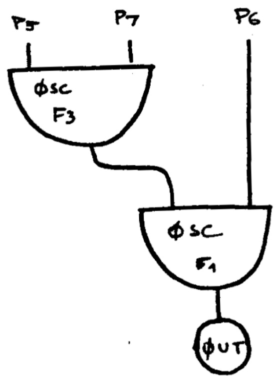

The amplitude is controlled by F3:

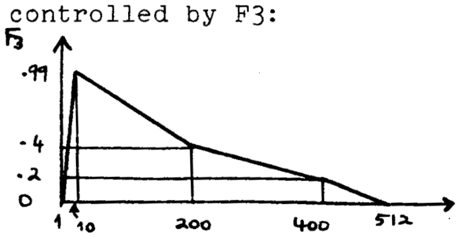

For a duration smaller than about .2s, this function will give a sharp attack; the decay consists of 3 linear portions: the 2 first approximate an exponential shape, the 3rd tries to imitate the effect of a damper.

The wave form is given by F1, which consists of 10 harmonics.

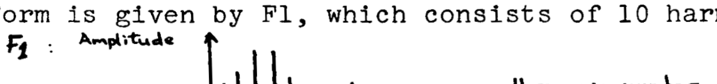

With 10Kc sampling rate, all the harmonics will be heard without foldover up to a fundamental frequency of about 400Hz.

2)brief and high notes played on instrument #2. (duration $\lesssim$.2s, frequency $\gtrsim$250Hz)

This instrument is similar to instrument #1 except that the waveshape is given by F2, which consists of only 7 harmonics.

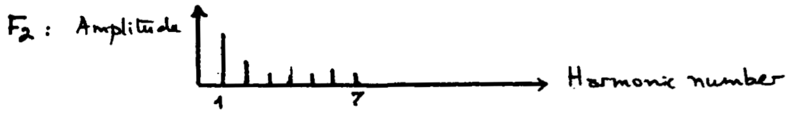

3)long and low notes played on instrument #3. (duration $\gtrsim$2s, frequency $\gtrsim$250Hz)

This instrument is similar to instrument #1, but here the amplitude is controlled by F4.

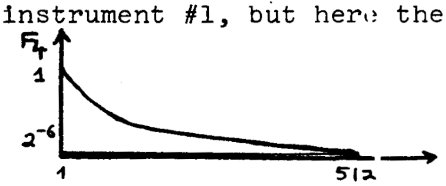

F4 decays exponentially from 1 to 2^{-6}=1/64. Thus the duration of the note corresponds to 6/10 of "reverberation time" (time for the level to drop 60 db). In this example, "long' notes last between about .4 and .8s, and this would correspond to a "reverberation time" of the order of 1s, which is shorter than that of a real piano (around 1s at 2000Hz, around 10s at 200Hz). (However, in real pianos the initial decay rate is higher, thus the discrepancy is not as large as it would seem from these data.)

4)long and high notes played on instrument #4. (duration $\gtrsim$.2s, frequency $\gtrsim$250Hz)

This instrument is similar to instrument #3, but the waveshape is given by F2, as in instrument #3.

301

```
COMMENT  MANH. BLUES ON TAPE M1485;
COMMENT:BRIEF NOTES;
COMMENT:LOW NOTES;
INS 0 1;OSC P5 P7 B3 F3 P30;OSC B3 P6 B3 F1 P29;OUT B3 B1;END;
COMMENT:HIGH NOTES;
INS 0 2;OSC P5 P7 B3 F3 P30;OSC B3 P6 B3 F2 P29;OUT B3 B1;END;
COMMENT:LONG NOTES;
COMMENT:LOW NOTES;
INS 0 3;OSC P5 P7 B3 F4 P30;OSC B3 P6 B3 F1 P29;OUT B3 B1;END;
COMMENT:HIGH NOTES;
INS 0 4;OSC P5 P7 B3 F4 P30;OSC B3 P6 B3 F2 P29;OUT B3 B1;END;
SIA 0 4 10000;
COMMENT METRONOME MARKING 150;SV2 0 2 30;SV2 0 30 0 150 15 150;
COMMENT:LO NOTE WAVE;
GEN 0 2 1 .158 .316 1 1 .282 .112 .063 .079 .126 .071 10;
COMMENT:HI NOTE WAVE;
GEN 0 2 2 1 .282 .089 .1 .071 .089 .050 7;
COMMENT:SHORT NOTE ENVELOPE;
GEN 0 1 3 0 1 .999 10 .4 200 .2 400 0 512;
COMMENT:LONG NOTE ENVELOPE;
GEN 0 5 4 -6;
NOT 1 3 1.66 300 104 1;NOT 1 3 1.66 300 175 1;
NOT 1 3 1.65 300 233 1;NOT 1 4 1.66 300 277 1;
NOT 1 4 1.66 300 330 1;
NOT 1.5 3 1.16 250 207 1;NOT 1.5 4 1.16 250 349 1;
NOT 1.5 4 1.16 250 440 1;NOT 1.5 4 1.16 250 554 1;
NOT 2.66 1 .34 300 104 1;NOT 2.66 1 .34 300 175 1;
NOT 2.66 1 .34 300 233 1;NOT 2.66 2 .34 300 277 1;
NOT 2.66 2 .34 300 330 1;
NOT 3 3 1 400 207 1;NOT 3 4 1 400 349 1;
NOT 3 4 1 400 440 1;NOT 3 4 1 400 554 1;
NOT 4 3 2 250 104 1;NOT 4 3 2 250 147 1;
NOT 4 3 2 250 165 1;NOT 4 3 2 250 196 1;
NOT 4 3 2 250 233 1;
NOT 5 3 1 300 207 1;NOT 5 4 1 300 294 1;
NOT 5 4 1 300 330 1;NOT 5 4 1 300 392 1;
NOT 5 4 1 300 494 1;
NOT 6 3 1.66 300 104 1;NOT 6 3 1.66 300 175 1;
NOT 6 3 1.65 300 233 1;NOT 6 4 1.66 300 277 1;
NOT 6 4 1.66 300 330 1;
NOT 6.5 3 1.16 250 207 1;NOT 6.5 4 1.16 250 349 1;
NOT 6.5 4 1.16 250 440 1;NOT 6.5 4 1.16 250 554 1;
NOT 7.66 1 .34 300 104 1;NOT 7.66 1 .34 300 175 1;
NOT 7.66 1 .34 300 233 1;NOT 7.66 2 .34 300 277 1;
NOT 7.66 2 .34 300 330 1;
NOT 8 3 1 400 207 1;NOT 8 4 1 400 349 1;
NOT 8 4 1 400 440 1;
NOT 8 4 1 400 554 1;
NOT 9 3 2 250 104 1;NOT 9 3 2 250 147 1;
NOT 9 3 2 250 165 1;NOT 9 3 2 250 196 1;
NOT 9 3 2 250 233 1;
NOT 10 3 1 300 207 1;NOT 10 4 1 300 294 1;
NOT 10 4 1 300 330 1;NOT 10 4 1 300 392 1;
NOT 10 4 1 300 494 1;        TER 15;
      SUBROUTINE CONVT
      COMMON IP(10),P(100),G(1000)
      IF(P(1).NE.1.)GOTO100
      F=511./G(4)
      P(6)=F*P(6)
      P(7)=F/P(4)
  100 RETURN
      END
```

#400

This run gives a few percussive sounds reminding of a drum--with and without snares. The 1st and the 3rd sections are played back at a sampling rate of 20,000Hz, and the 2nd section is played back at a sampling rate of 5000Hz, as specified in the score.

Instrument #1 is used to generate these percussive sounds (it is also used in example #410). It is diagrammed below:

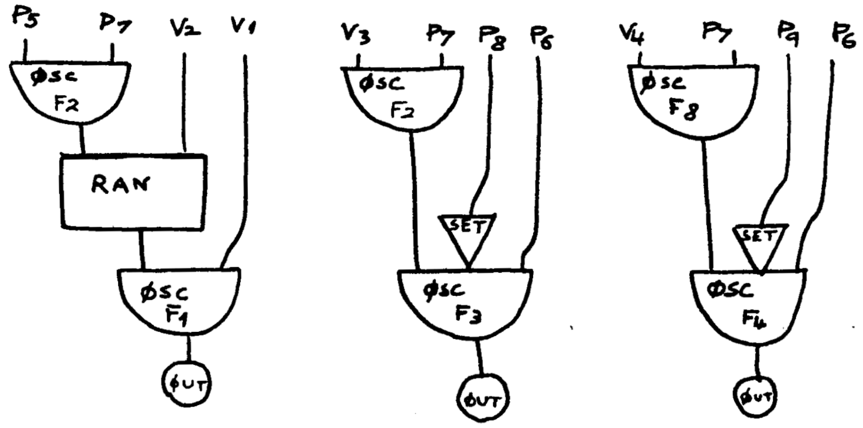

This instrument gives a sound which is the sum of a frequency band, of a sine wave and of an inharmonic spectrum.

The frequency band is generated by random amplitude modulation of a sine wave F1. The center frequency is given by V1*, the half bandwidth by V2*. The envelope is given by function F2, which decays exponentially from 1 to 2^{-12}.

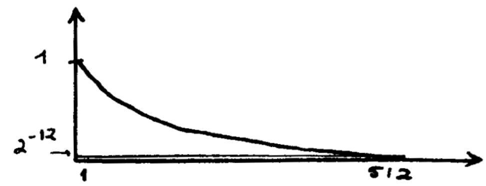

* third-pass variables

F4 is a sine wave--it is the 10th harmonic of the fundamental frequency specified in P6. Thus if P6 = 20, the actual frequency of this sine wave is 200. The envelope is given by function F8, which decays exponentially from 1 to 2^{-8}.

The "inharmonic" spectrum is, in fact, an approximation to an inharmonic spectrum, obtained by playing a wave containing only high order harmonics at a very low frequency. F3 comprises harmonics #10, 16, 22, 23: thus with a fundamental frequency (specified in P6) of 20, this will give component frequencies 200, 320, 440, 460. The envelope is controlled by F2.

The amplitudes for the noise band, the sine wave and the inharmonic spectrum are given respectively by P5, V3* and V4*.

Section 1 gives the following pattern
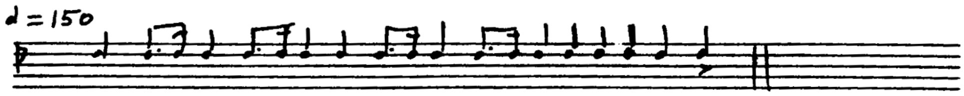
played with a snare-like effect given by a noise band centered at 4000Hz and of 3000Hz bandwidth. The sine wave component has frequency 200Hz.

* third-pass variables

Section 2 gives the following pattern

played "without snares": there is no noise band (P5=0). The four pitches correspond to fundamental frequencies of 120, 140, 150, and 160 Hz.

Section 3 gives the following pattern

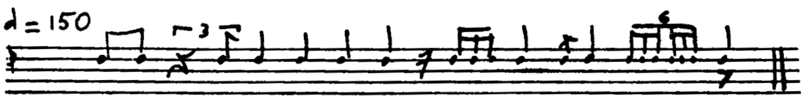

played again with snares.

400

```
COMMENT:DRUM AND SNARE DRUM ON TAPE M3586 FILES 2 3 4;
COMMENT:TO SKIP FILE 1;GEN 0 5 1;
COMMENT:SNARE;
COMMENT:4 KC CENTER 3 KC BAND NOISE  200 HZ SINE AND MEMBRANE SPECTRUM;
COMMENT:20 KC SAMPLING;SIA 0 4 20000;
COMMENT:FOR DRUM;
INS 0 1;OSC P5 P7 B3 F2 P30;RAN B3 V2 B3 P29 P28 P27;
OSC B3 V1 B3 F1 P26;OUT B3 B1;
OSC V3 P7 B4 F2 P25;SET P8;OSC B4 P6 B4 F3 P24;OUT B4 B1;
OSC V4 P7 B5 F8 P23;SET P9;OSC B5 P6 B5 F4 P22;OUT B5 B1;END;
GEN 0 2 1 1 1;
GEN 0 7 2 -12;
GEN 0 4 3 1 10 0 1 512 1.5 16 0 1 512 2 22 0 1 512 1.5 23 0 1 512 ;
GEN 0 4 4 1 10 0 1 512;
GEN 0 1 7 0 1 .99 5 0 100 0 512;
GEN 0 7 8 -8;
SV3 0 1 100 65 300 800;
NOT  .4 1 .2 1000 20 0;
NOT  .8 1 .2 1000 20 0;
NOT 1.1 1 .15 1000 20 0;
NOT 1.2 1 .2 1000 20 0;
NOT 1.6 1 .2 1000 20 0;
NOT 1.9 1 .15 1000 20 0;
NOT 2.0 1 .2 1000 20 0;
NOT 2.4 1 .2 1000 20 0;
NOT 2.8 1 .2 1000 20 0;
NOT 3.1 1 .15 1000 20 0;
NOT 3.2 1 .2 1000 20 0;
NOT 3.6 1 .2 1000 20 0;
NOT 3.9 1 .15 1000 20 0;
NOT 4.0 1 .2 1000 20 0;
NOT 4.4 1 .2 1000 20 0;
NOT 4.8 1 .2 1000 20 0;
NOT 5.2 1 .2 1000 20 0;
NOT 5.6 1 .2 1000 20 0;
NOT 6.0 1 .25 1300 20 0;
SEC 8;
COMMENT:TO WRITE END OF FILE MARK; GEN 0 5 0;
COMMENT:DRUM;COMMENT:5 KC SAMPLING;SIA 0 4 5000;
COMMENT:MEMBRANE SPECTRUM,SINE WAVE,NO NOISE BAND;
SV3 0 1 7.5 2.5 500 1500;
NOT .4 1 .3 0 12 0;NOT .8 1 .2 0 16 0;
NOT 1.07 1 .2 0 12 0;NOT 1.2 1 .2 0 16 0;
NOT 1.6 1 .3 0 12 0;NOT 2.0 1 .25 0 14 0;
NOT 2.4 1 .23 0 15 0;
NOT 2.6 1 .27 0 15 0;
NOT 3.07 1 .23 0 15 0;NOT 3.2 1 .23 0 15 0;
NOT 3.6 1 .23 0 15 0;
NOT 4.0 1 .23 0 15 0;
SEC 6;
COMMENT:TO WRITE END OF FILE MARK; GEN 0 5 0;
COMMENT:SNARE DRUM;COMMENT:20 KC SAMPLING;SIA 0 4 20000;
GEN 0 7 2 -12;
GEN 0 1 7 0 1 .99 5 0 100 0 512;
GEN 0 7 8 -8;
SV3 0 1 100 65 300 800;
NOT .4 1 .15 1000 20 0;NOT .6 1 .2 1000 20 0;
NOT 1.07 1 .2 1000 20 0;
NOT 1.2 1 .2 1000 20 0;
NOT 1.6 1 .2 1000 20 0;
NOT 2.0 1 .2 1000 20 0;
NOT 2.4 1 .25 1200 20 0;NOT 2.9 1 .15 1000 20 0;
```

\# 400, continued

```
NOT 3.0 1 .15 1000 20 0;
NOT 3.1 1 .15 1000 20 0;
NOT 3.2 1 .20 1000 20 0;
NOT 3.55 1 .15 700 20 0;
NOT 3.6 1 .2 700 20 0;
NOT 4.0  1 .15 800 20 0;
NOT 4.06 1 .15 800 20 0;
NOT 4.13 1 .15 800 20 0;
NOT 4.20 1 .15 800 20 0;
NOT 4.27 1 .15 800 20 0;
NOT 4.33 1 .15 800 20 0;
NOT 4.4 1 .22 1200 20 0;
TER 6;
          SUBROUTINE CONVT
          COMMON IP(10),P(100),G(1000)
          IF(P(1).NE.1.)GOTO100
          F=511./G(4)
          P(6)=F*P(6)
          P(7)=F/P(4)
          IF(P(3).EQ.1.)GOTO100
          P(6)=P(6)*G(11)
  100     RETURN
          END
```

#410

This run gives a few percussive sounds. The two first sections are played back at a sampling rate of 5000Hz, while they have been synthesized with a specified rate of 10,000Hz: hence, for these two sections, the durations are the double and the frequencies are the half of those specified in the score. The two last sections, giving two bell-like sounds, are played back at sampling rate 10,000Hz and the frequencies and durations are as specified in the score.

Instrument #1 is used to generate the percussive sounds of the two first sections. It is diagrammed below:

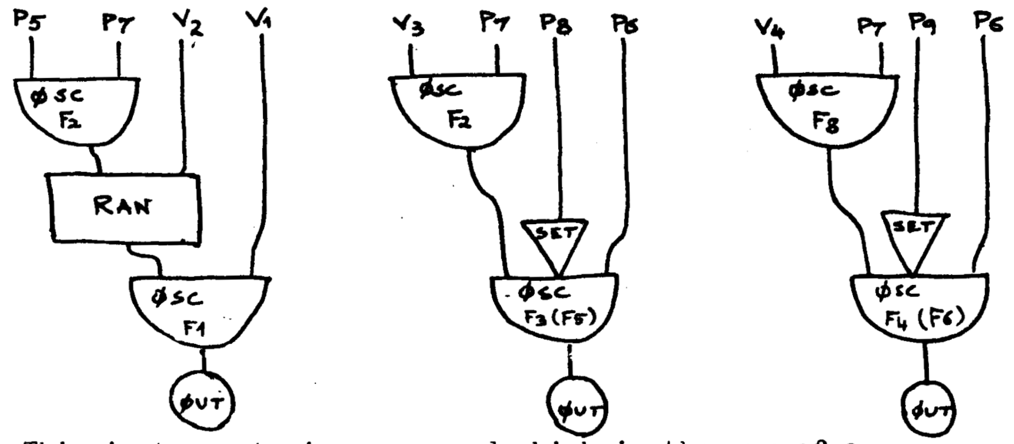

This instrument gives a sound which is the sum of a frequency band and of an inharmonic spectrum. This sound decays exponentially.

The frequency band is generated by random amplitude modulation of a sine wave F1. The center frequency is given by V1, the half-bandwidth by V2.* The envelope is controlled by function F2, which decays exponentially from 1 to 2^{-7}.

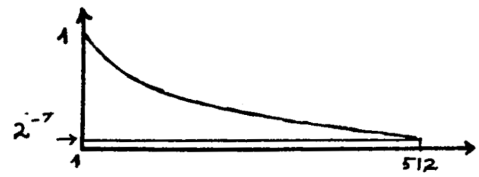

The "inharmonic" spectrum is actually harmonic: an approximation to an inharmonic spectrum is obtained by playing at a very low frequency a wave containing only high order harmonics. For instance, spectrum 1 is generated by periodic waves comprising harmonics #10, #16, #22, #23, #25, #29, #32: at frequency 10 (specified by P6), this will give component frequencies 100, 160, 220, 230, 250, 290, 320. Spectrum 1 is here obtained by the sum of functions F3, comprising harmonics 10, 16, 22, 23, and F4, comprising harmonics 25, 29, 32: the envelope of F3 is controlled by F2, whereas the envelope of F4 is controlled by F8, which insures a faster decay for the higher components.

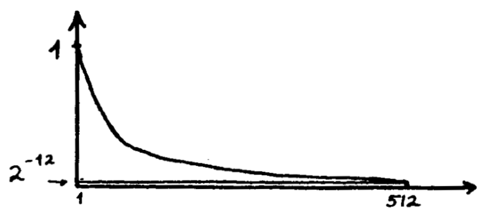

By means of P7 and P9, functions F3 and F4 can be changed to other functions. Here, in addition to spectrum 1, which is an approximation to a membrane spectrum, an approximation to the spectrum of a struck metallic object has been tried: it is called spectrum 2. It is obtained by the sum of functions F5, which comprises harmonics 16, 20, 22, 34, 38, 47, and F6, which comprises harmonics 50, 53, 65, 70, 75, 77, 100.

*The values of 3rd pass variables V1 & V2 correspond to a center frequency and a bandwidth of 1000 and 800 Hz at 10Kc sampling rate, hence of 500 & 400 Hz in the sound example, recorded at 5Kc.

Instrument #2 is used to generate inharmonically related frequency components of bell-like sounds. The waveshape F1 ia a sine wave. Function F7, controlling the envelope, decays exponentially from 1 to 2^{-7}. The lowest component frequency is specified in the score by V11 (Pass II variable); in a component note card, P6 specifies the ratio of the frequency of a component to the frequency of the lowest component: CØNVT multiplies P6 by V11. (E.g., if the components were harmonically related, the P6 would be 1, 2, 3 ...)

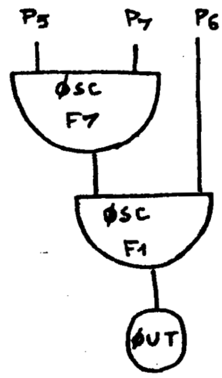

Section 1 includes 3 sounds of actual duration .8, 2, and 4s played on instrument #1, first with spectrum 1, then with spectrum 2, with a fundamental frequency of 50Hz.

Section 2 includes 3 sounds of duration 18, 2, and 4s played on instrument #1 with spectrum, with a fundamental frequency of 150Hz.

Section 3 gives a bell-like sound played with instrument #2. It consists of 7 components of frequencies proportional to 1, 2, 2.4, 3, 4.5, 5.33, 6 having different decay times. The lowest component is at frequency 329.

Section 4 gives a bell-like sound played with instrument #2, consisting of only 4 components.

410

```
COMMENT:PERCUSSION;
COMMENT:TAPE M1172;
COMMENT:FOR DRUM;
INS 0 1;OSC P5 P7 B3 F2 P30;RAN B3 V2 B3 P29 P28 P27;
OSC B3 V1 B3 F1 P26;OUT B3 B1;
OSC V3 P7 B4 F2 P25;SET P8;OSC B4 P6 B4 F3 P24;OUT B4 B1;
OSC V4 P7 B5 F8 P23;SET P9;OSC B5 P6 B5 F4 P22;OUT B5 B1;END;
SV3 0 1 50 40 500 500;
COMMENT:FOR BELLS;
INS 0 2;OSC P5 P7 B3 F7 P30;OSC B3 P6 B3 F1 P29;OUT B3 B1;END;
GEN 0 2 1 1 1;GEN 0 7 2 -7;
COMMENT:FOR SPECTRUM 1;
GEN 0 4 3 1 10 0 1 512 1.5 16 0 1 512 2 22 0 1 512 1.5 23 0 1 512;
GEN 0 4 4 1 25 0 1 512 .5 29 0 1 512 .2 32 0 1 512;
COMMENT:FOR SPECTRUM 2;
GEN 0 4 5 1 15 0 1 512 1 20 0 1 512 1 22 0 1 512 2 34 0 1 512
1 38 0 1 512 1 47 0 1 512;
GEN 0 4 6 2 50 0 1 512 1 53 0 1 512 1 65 0 1 512 1 70 0 1 512
1 75 0 1 512 1 77 0 1 512 1 100 0 1 512;
GEN 0 7 7 -9;GEN 0 7 8 -12;
COMMENT:DRUM;
COMMENT:FREQUENCY 100 HZ AT 10 KC SAMPLING RATE;
COMMENT:SPECTRUM1;
NOT 1 1 .4 500 10 0;NOT 2 1 1 500 10 0;
NOT 3.5 1 2 500 10 0;
COMMENT:SPECTRUM 2;
NOT 5 1 .4 500 10 0 5 6;NOT 7 1 1 500 10 0 5 6;
NOT 8.5 1 2 500 10 0 5 6;
SEC 12;
COMMENT:FREQUENCY 300 HZ SPECTRUM 2;
NOT 1 1 .4 500 30 0;NOT 2 1 1 500 30 0;
NOT 3.5 1 2 500 30 0;
SEC 5;
COMMENT:BELL LIKE SOUNDS:
COMMENT:LOWEST FREQUENCY 329;       SV2 C 11 329;
NOT 1 2 3 200 1 0;NOT 1 2 2.8 200 2 0;NOT 1 2 2.7 200 2.4 0;
NOT 1 2 2.4 200 3 0;NOT 1 2 2.2 200 4.5 0;NOT 1 2 2 300 5.33 0;
NOT 1 2 1.5 300 6 0;
SEC 5;
NOT 1 2 4 400 1 0;NOT 1 2 3.5 400 2 0;NOT 1 2 3.2 400 2.5 0;
NOT 1 2 2.9 400 3.36 0;
TER 7;

      SUBROUTINE CONVT
      COMMON IP(10),P(100),G(1000)
      IF(P(1).NE.1.)GOTO100
      F=511./G(4)
      P(5)=F*P(6)
      P(7)=F/P(4)
      IF(P(3).EQ.1.)GOTO100
      P(5)=P(6)*G(11)
 100  RETURN
      END
```

#411

This run gives some more percussive sounds, with the instruments and functions described for #410. Here the sampling rate for playback is 10,000Hz, as specified in the score.

1st section gives 6 sounds of increasing pitches played on instrument #1 with spectrum 1.

2nd section is similar to 1st section, but with spectrum 2.

3rd section gives 3 sounds of increasing durations and decreasing pitches with spectrum 1.

4th section is similar to 3rd section, but with spectrum 2.

5th, 6th, and 7th sections give 4 bell-like sounds played on instrument #2.

411

```
COMMENT:PERCUSSION;
COMMENT:FOR DRUM;
INS 0 1;OSC P5 P7 B3 F2 P30;RAN B3 V2 B3 P29 P28 P27;
OSC B3 V1 B3 F1 P26;OUT B3 B1;
OSC V3 P7 B4 F2 P25;SET P8;OSC B4 P6 B4 F3 P24;OUT B4 B1;
OSC V4 P7 B5 F8 P23;SET P9;OSC B5 P6 B5 F4 P22;OUT B5 B1;END;
SV3 0 1 50 40 500 500;
COMMENT:FOR BELLS;
INS 0 2;OSC P5 P7 B3 F7 P30;OSC B3 P6 B3 F1 P29;OUT B3 B1;END;
GEN 0 2 1 1 1;GEN 0 7 2 -7;
COMMENT:FOR SPECTRUM 1;
GEN 0 4 3 1 10 0 1 512 1.5 16 0 1 512 2 22 0 1 512 1.5 23 0 1 512;
GEN 0 4 4 1 25 0 1 512 .5 29 0 1 512 .2 32 0 1 512;
COMMENT:FOR SPECTRUM 2;
GEN 0 4 5 1 15 0 1 512 1 20 0 1 512 1 22 0 1 512 2 34 0 1 512
1 38 0 1 512 1 47 0 1 512;
GEN 0 4 6 2 50 0 1 512 1 53 0 1 512 1 65 0 1 512 1 70 0 1 512
1 75 0 1 512 1 77 0 1 512 1 100 0 1 512;
GEN 0 7 7 -9;GEN 0 7 8 -12;
COMMENT:DRUM;
COMMENT:BRIFF SOUNDS SPECTRUM 1;
NOT 1.2 1 .5 150 5.8 3 3 4;
NOT 1.8 1 .2 150 9.8 0;
NOT 2 1 .4 150 13.9 0;
NOT 2.9 1 .3 150 22 0;
NOT 3.5 1 .3 150 31.1 0;
NOT 3.8 1 .2 150 49.3 0;
SEC 5;
COMMENT:BRIFF SOUNDS SPECTRUM 2;
NOT 1.2 1 .5 150 5.8 3 5 6;
NOT 1.8 1 .2 150 9.8 0;
NOT 2 1 .4 150 13.9 0;
NOT 2.9 1 .3 150 22 0;
NOT 3.5 1 .3 150 31.1 0;
NOT 3.8 1 .2 150 49.3 0;
SEC 5;
COMMENT:LONGER SOUNDS SPECTRUM 1;
NOT 1 1 1 150 22 0 3 4;
NOT 2 1 2 500 13.9 0;
NOT 4 1 4 800 5.8 0;
SEC 10;
COMMENT:LONGER SOUNDS SPECTRUM 2;
NOT 1 1 1 150 22 0 5 6;
NOT 2 1 2 500 13.9 0;
NOT 4 1 4 800 5.8 0;
SEC 10;
COMMENT:BELLS;
COMMENT:FREQUENCE FALE 104;SV2 0 11 104;
NOT 1 2 2 400 1 0;NOT 1 2 1.7 400 1.5 0;NOT 1 2 1.5 400 2 0;
NOT 1 2 1.3 400 2.7 0;NOT 1 2 1.1 400 3.3 0;
NOT 5 2 3 200 1 0;
NOT 5 2 2.8 200 1.65 0;                          NOT 5 2 2.4 200 3 0;
NOT 5 2 2.7 200 2.10 0;
NOT 5 2 2.1 200 3.54 0;NOT 5 2 2 200 4.97 0;NOT 5 2 1.5 200 5.33 0;
SEC 10;
NOT 1 2 3 200 1 0;NOT 1 2 2.8 200 2 0;NOT 1 2 2.7 200 2.4 0;
NOT 1 2 2.4 200 3 0; NOT 1 2 2.2 200 4.5 0;NOT 1 2 2 300 5.33 0;
NOT 1 2 1.5 300 6 0;
SEC 5;
NOT 1 2 4 400 1 0;NOT 1 2 3.5 400 2 0;NOT 1 2 3.2 400 2.5 0;
NOT 1 2 2.9 400 3.36 0;
TER 7;
```

#411, continued

```
      SUBROUTINE CONVT
      COMMON IP(10),P(100),G(1000)
      IF(P(1).NE.1.)GOTO100
      F=511./G(4)
      P(6)=F*P(6)
      P(7)=F/P(4)
      IF(P(3).EQ.1.)GOTO100
      P(6)=P(6)*G(11)
100   RETURN
      END
```

#420

This run gives percussive sounds reminding of gong sounds.

There is a separate note card for each frequency component of the sound; all components are generated by instrument #1, diagrammed here.

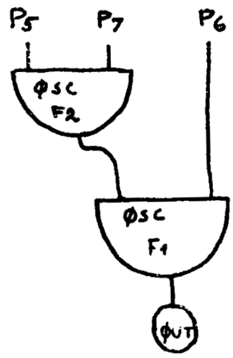

The waveshape F1 is a sine wave. Function F2 controls the envelope; F2 is decaying exponentially from 1 to 2^{-7}. The component frequency is given by P6*, its initial amplitude by P5 and the duration of the decay by P4*, duration of the note.

The frequencies of the components are not harmonically related.

In the first sound, all frequency components decay synchronously. The spectrum is thus invariant; the effect reminds of an element of an electronic chime.

In the second sound, the same frequency components have a decay time approximately inversely proportional to their frequencies (although this principle is not followed inflexibly, to give a more intricate decay pattern). The sound has more life and naturalness than the first one.

The following sound consists of different frequency

---

* This run has been computed with a sampling rate of 20,000Hz, but the sound example presents it played back with a sampling rate of 5000Hz. Hence actual durations correspond to 4 times the values indicated in P4; actual frequencies correspond to .25 times the values indicated in P5.

components with non-synchronous decay.

Then follow four partly overlapping sounds of the same type; the beating of close components gives some warmth to the sound.

#420

```
COMMENT:GONG LIKE SOUNDS;
COMMENT:RUN 2 ON TAPE M3282 FILE 2;GEN 0 5 1;
INS 0 1;OSC P5 P7 B3 F2 P30;OSC B3 P6 B3 F1 P29;OUT B3 B1;END;
COMMENT: PLAY AT A SAMPLING RATE OF 4000 HZ;
COMMENT:ORIGINAL SAMPLING RATE 20000 HZ;        SIA 0 4 20000;
COMMENT:PLAY AT A SAMPLING RATE OF 5000 HZ;
COMMENT:HENCE DURATIONS MULTIPLIED BY 4, FREQUENCIES  DIVIDED BY 4;
GEN 0 2 1 1 1;GEN 0 7 2 -7;
COMMENT:FOR DEMONSTRATION FIRST NOTE WITH SYNCHRONOUS DECAY;
NOT 1 1 2.5 300 960 0;NOT 1 1 2.5 250 1110 0;NOT 1 1 2.5 200 1540 0;
NOT 1 1 2.5 300 2420 0;NOT 1 1 2.5 100 1360 0;NOT 1 1 2.5 100 2680 0;
NOT 1 1 2.5 100 3250 0;
SEC 5;
NOT 1 1 2.5 300 960 0;NOT 1 1 2.4 250 1110 0;NOT 1 1 2.2 200 1540 0;
NOT 1 1 .4 300 2420 0;NOT 1 1 2 100 1360 0;NOT 1 1 1.3 100 2680 0;
NOT 1 1 1 100 3250 0;
NOT 5 1 2 300 970 0;NOT 5 1 1.9 250 1230 0;NOT 5 1 1.7 100 1360 0;
NOT 5 1 1.2 200 1536 0;NOT 5 1 .9 100 2048 0;NOT 5 1 .7 150 3280 0;
SEC 8;
NOT 1 1 2.5 150 960 0;NOT 1 1 2.4 125 1110 0;NOT 1 1 2.2 150 1540 0;
NOT 1 1 .8 100 2420 0;NOT 1 1 2 50 1360 0;NOT 1 1 1.3 50 2680 0;
NOT 1 1 1 50 3250 0;
NOT 1.7 1 2.2 200 965 0;NOT 1.7 1 2.1 150 1050 0;NOT 1.7 1 1 250 1430 0;
NOT 1.7 1 1.3 100 1210 0;NOT 1.7 1 1.1 100 1260 0;
NOT 1.7 1 1.9 100 1540 0;NOT 1.7 1 1.6 100 1930 0;
NOT 1.8 1 2.9 300 970 0;NOT 1.8 1 2.7 250 1230 0;
NOT 1.8 1 2.6 100 1360 0;NOT 1.8 1 1.6 200 1536 0;
NOT 1.8 1 1.2 100 2048 0;NOT 1.8 1 1.1 150 3280 0;
NOT 3.2 1 3.4 150 960 0;NOT 3.2 1 3.2 125 1110 0;
NOT 3.2 1 3.0 150 1540 0;NOT 3.2 1 2.1 50 2420 0;
NOT 3.2 1 .8 100 1360 0;NOT 3.2 1 1.6 50 2680 0;
NOT 3.2 1 1.1 50 3250 0;
TER 8;
      SUBROUTINE CONVT
      COMMON IP(10),P(100),G(1000)
      IF(P(1).NE.1.)GOTO100
      F=511./G(4)
      P(6)=F*P(6)
      P(7)=F/P(4)
  100 RETURN
      END
```

#430

This run gives three successive approximations of a bell sound.

There is a separate note card for each frequency component of the sound; all components are generated by instrument #1, diagrammed here.

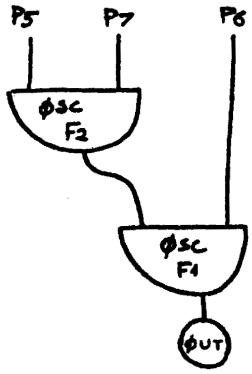

The waveshape F1 is a sine wave. Function F2 controls the envelope; F2 is decaying exponentially from 1 to 2^{-10}. The component frequency is given by P6, its amplitude by P5, and the duration of the decay by P7. (P(7) = P(4)).

The frequencies of the components do not form a harmonic series; however, they are not arbitrarily inharmonic. In most actual bells it is attempted to approximate the following ratios for the 1st 5 components: .5, 1, 1.2, 1.5, 2 (corresponding for example to the following succession of notes: G, G, B flat, D, G, called respectively hum notes, fundamental, minor third, fifth, nominal). Here the frequency ratios of the components are as follows: .56, .92, 1.19, 1.71, 2, 2.74, 3, 3.76, 4.07.

In the first sound, all these frequency components decay synchronously. This gives an unnatural sound.

In the second sound, the components have a decay time approximately inversely proportional to their frequencies (although this principle is violated in one instance where a lower component decays faster: this gives a slight bounce a little after the beginning of the sound). The sound is much more natural, yet still a little dull.

In the third sound, each of the two lowest partials is split into two components of slightly different frequencies (224 and 225, 368 and 369.7). This causes beats which add some life and warmth to the sound. It is likely that in real bells partials are split into two close components, due to departure from rotational symmetry.

#430

```
COMMENT:BELL EXPERIMENTS;
COMMENT:ON TAPE M1485 FILE 4; GEN 0 5 3;
COMMENT:5 KC SAMPLING RATE; SIA 0 4 5000;
INS 0 1;OSC P5 P7 B3 F2 P30;OSC B3 P6 B3 F1 P29;OUT B3 B1;END;
COMMENT:TO SET GENERAL CONVT;          SV2 0 10 2 6 -7;
GEN 0 2 1 1 1;  GEN 0 7 2 -10;
COMMENT:SYNCHRONOUS DECAY;
NOT 1 1 20 250 224.5 20;NOT 1 1 20 400 368.5 20;
NOT 1 1 20 400 476 20;NOT 1 1 20 250 684 20;
NOT 1 1 20 220 800 20;NOT 1 1 20 200 1096 20;
NOT 1 1 20 200 1200 20;NOT 1 1 20 150 1504 20;
NOT 1 1 20 200 1628 20;
SEC 21;
COMMENT:NON SYNCHRONOUS DECAY;
NOT 1 1 20 250 224 20;NOT 1 1 12 400 368.5 12;
NOT 1 1 6.5 400 476 6.5;NOT 1 1 7 250 680 7;
NOT 1 1 5 220 800 5;NOT 1 1 4 200 1096 4;
NOT 1 1 3 200 1200 3;NOT 1 1 2 150 1504 2;
NOT 1 1 1.5 200 1628 1.5;
SEC 21;
COMMENT:NON SYNCHRONOUS DECAY AND TWO SPLIT PARTIALS;
NOT 1 1 20 150 224 20;NOT 1 1 18 100 225 18;
NOT 1 1 13 150 368 13;NOT 1 1 11 270 369.7 11;
NOT 1 1 6.5 400 476 6.5;NOT 1 1 7 250 680 7;
NOT 1 1 5 220 800 5;NOT 1 1 4 200 1096 4;
NOT 1 1 3 200 1200 3;NOT 1 1 2 150 1504 2;
NOT 1 1 1.5 200 1628 1.5;
TER 22;
```

#440

This run gives some drum-like sounds with variable frequency (plus a non drum-like sound).

The sounds are generated by instrument #3, which uses among its inputs the output of degenerate instrument #2.

Instrument #2 is used to effect pitch changes. It is a degenerate instrument, the output of which goes into B5. Function F2 controls pitch evolution. P6 gives the duration of the frequency cycle (which for all examples of this run coincides with the note duration-- in fact it is made slightly longer to be sure to avoid a recycling of the frequency function at the end of the note. This can happen due to round off errors in the increment value, especially with computers of 24 bit word length). P5 = 1.

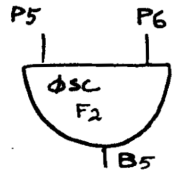

Instrument #3 comprises 3 parallel oscillators with different envelope controls, as shown by the diagram.

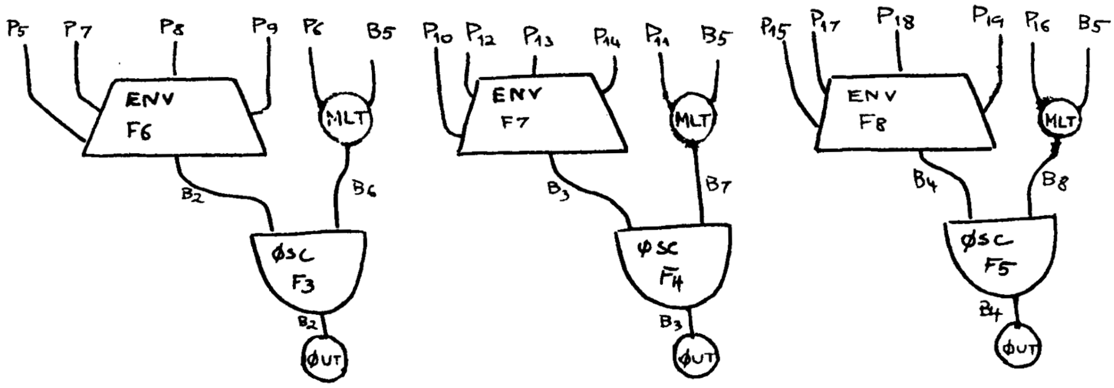

One of these oscillators generates the fundamental of maximum frequency 160Hz (F3 is a sine wave.). The amplitude is controlled

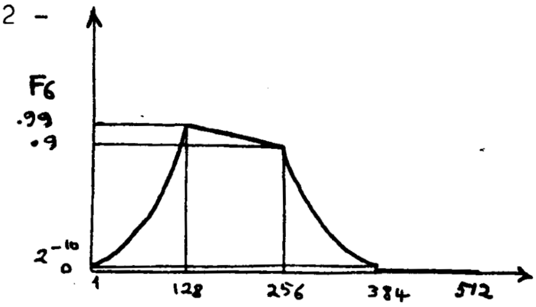

by F6. In all examples given here (except the last note) the attack time is 10ms or 30ms (note this is not a linear attack--otherwise these times would be smaller), the "steady" state lasts 0ms or 30ms and the decay time is about 1.6s.

The two other oscillators play waveshapes F4 and F5, which comprise high order harmonics of a low fundamental--in order to imitate an inharmonic set of partials. (F4 comprises harmonics 3, 4, 5, 6: with P11 = 75, this oscillator will give frequencies 225, 300, 375, 450; similarly F5 comprises harmonics 8, 9, 10, 11, 12, 15, 17, 18, with P16 = 61, which yields frequencies between 500 and 1100.) The amplitude are controlled respectively by F7 and F8, which insure a fast decay for waves F4 and F5 (in this example, about .6 and .3s to decay to 1/1000 of the initial amplitude for all notes except the last one).

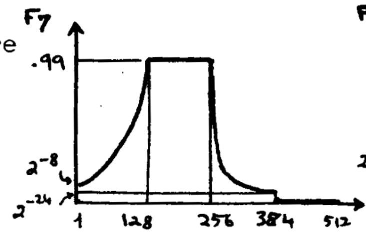

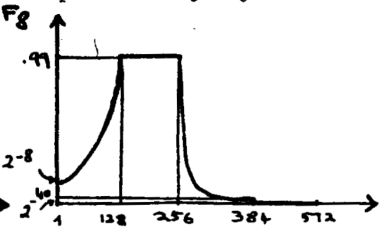

The 1st section plays 2 notes with constant pitch--the 2nd note has a longer attack and a 30ms steady state for the fundamental.

The 2nd section is similar, but the pitch is going up a minor third from the beginning to the end of each note.

The 3rd section is similar, but the pitch is going up then down during each note, since the frequency is controlled by function F2 as drawn here.

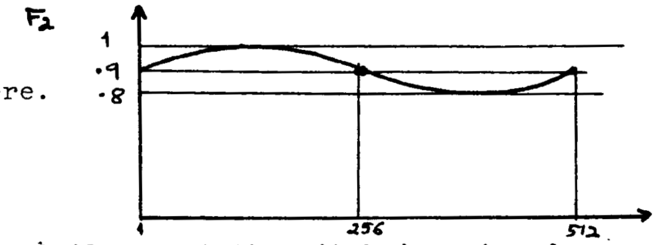

The 4th section is similar, but the pitch is going down a minor third from the beginning to the end of each note.

The last section gives a note generated with the same instrument but with parameters differing very much from the previous ones, especially a .9s attack time for wave F5 and an attack time occupying practically all the duration (2s) of the note for wave F4. This in only to show how easily a computer instrument designed for a particular purpose can be used to give different types of sound.

440

```
COMMENT:VARIABLE PITCH DRUMS;
SIA 0 4 5000;
COMMENT:FOR PITCH VARIATION;
INS 0 2;OSC P5 P6 B5 F2 P30;END;
COMMENT:FOR 3 COMPONENTS;
INS 0 3;ENV P5 F6 B2 P7 P8 P9 P30;
MLT P6 B5 B6;OSC B2 B6 B2 F3 P29;OUT B2 B1;
ENV P10 F7 B3 P12 P13 P14 P28;
MLT P11 B5 B7;OSC B3 B7 B3 F4 P27;OUT B3 B1;
ENV P15 F8 B4 P17 P18 P19 P26;
MLT P16 B5 B8;OSC B4 B8 B4 F5 P25;OUT B4 B1;END;
COMMENT:TO SET GENERAL CONVT;
SV2 0 20 1 -6;
SV2 0 30 6 6 107 11 112 16 117;
GEN 0 2 3 1 1;
GEN 0 2 4 0 0 1 1 .3 .2 6;
GEN 0 4 5 10 2 0 1 512 3 3 0 1 512 5 10 0 1 512
2 11 0 1 512 3 12 0 1 512 3 15 0 1 512 2 17 0 1 512 1 18 0 1 512;
COMMENT:FOR ENVELOPE;
GEN 0 6 6 10 .99 .3 10;
GEN 0 6 7 8 .99 .99 24;
GEN 0 6 8 8 .99 .99 40;
COMMENT:CONSTANT PITCH;  GEN 0 1 2 .99 1 .99 512;
NOT 1 2 1.63 1 1.63;
NOT 1 3 1.62 1000 160 .010 0 1.6 600 75 .010 0 1.61 300 61 .010 0 1.61;
NOT 3 2 1.7 1 1.7;
NOT 3 3 1.65 1000 160 .030 0 1.6 600 75 .010 0 1.65 300 61 .010 0 1.65;
SEC 5;
COMMENT:UP A MINOR 3D .85  1; GEN 0 1 2 .85 1 .99 512;
NOT 1 2 1.63 1 1.63;
NOT 1 3 1.62 1000 160 .010 0 1.6 600 75 .010 0 1.61 300 61 .010 0 1.61;
NOT 3 2 1.7 1 1.7;
NOT 3 3 1.65 1000 160 .030 0 1.6 600 75 .010 0 1.65 300 61 .010 0 1.65;
SEC 5;
COMMENT:OSCILL PITCH; GEN 0 2 2 .1 .9 1;
NOT 1 2 1.63 1 1.63;
NOT 1 3 1.62 1000 160 .010 0 1.6 600 75 .010 0 1.61 300 61 .010 0 1.61;
NOT 3 2 1.7 1 1.7;
NOT 3 3 1.66 1000 160 .030 0 1.6 600 75 .010 0 1.65 300 61 .010 0 1.65;
SEC 5;
COMMENT:DOWN A MINOR 3D; GEN 0 1 2 .99 1 .85 512;
NOT 1 2 1.63 1 1.63;
NOT 1 3 1.62 1000 160 .010 0 1.6 600 75 .010 0 1.61 300 61 .010 0 1.61;
NOT 3 2 1.7 1 1.7;
NOT 3 3 1.66 1000 160 .030 0 1.6 600 75 .010 0 1.65 300 61 .010 0 1.65;
SEC 5;
COMMENT:NOTE WITH NON REALISTIC PARAMETERS;
NOT 1 2 2 1 2;
NOT 1 3 2 1000 160 .010 0 1.95 600 75 92 0 1.9 800 61 .9 0 .8;
TER 4;
```

#490

This example presents a fragment obtained through mixing from runs #200, 301, 400, 410, and three other runs.

Three of the original sounds (excerpted from #200 and #410) underwent transposition by speed changing before mixing, the others did not undergo electroacoustic madification (except of course amplitude control). Some tape splicing was involved to excerpt single sounds from #200 and #410 and to place each element at the proper time. A chart of the beginning of the mixing is given.

As can be heard, the synchronization if not bad; with good tape recorders, it seems easy most of the time to achieve satisfactory synchronization up to durations of 30s to 1mn. In connection with this, it should be noted that tape recorder speeds often go down substantially, due to changes in tape tension, when one approaches the end of a reel (this has been studied by F. Harvey and J. McLean).

The runs used in this episode and not presented among the previous examples are briefly described below:

(1) a cluster of sinusoids, forming the following chord:
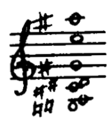
together with two brief episodes played by a simple instrument with feedback (c.f.,#510), and noted as follows:

(2) a run analagous to #301, but where the spectra are gradually moved from a low region (below aroung 600Hz) to a higher region (between about 500 and 2500Hz) by means redefining the functions giving the waveshape in the course of the run;

(3) a run analagous to the 2nd section #410, but with a lower pitch (frequencies about twice lower) and a regular beat:

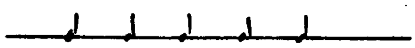 ...

The remarks mentioned for #512 apply to this example.

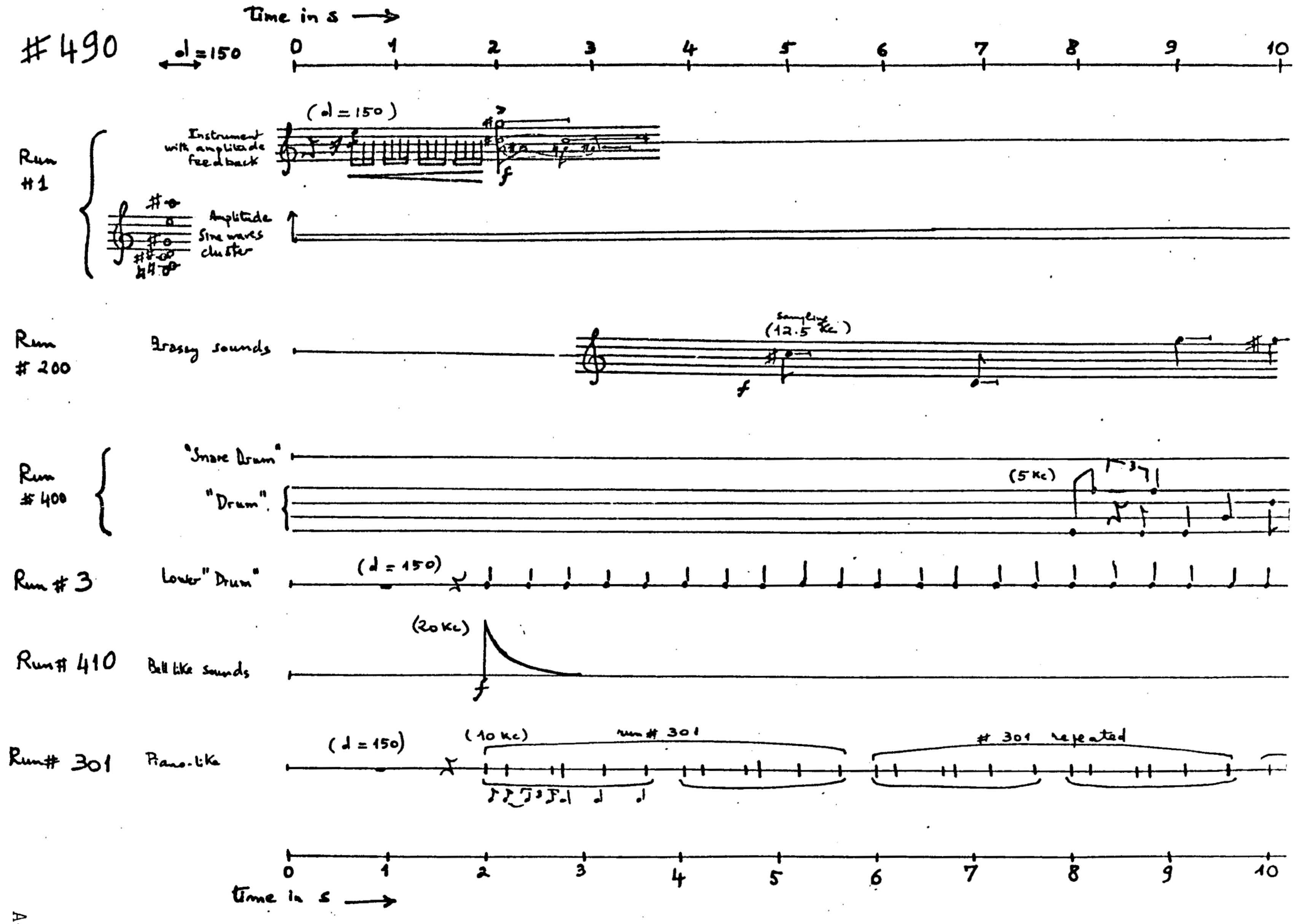

#490
♩=150
Time in s →
0 1 2 3 4 5 6 7 8 9 10
Run #1
(♩=150)
Instrument with amplitude feedback
f
Amplitude Sine waves cluster
Run # 200
Brassy sounds
sampling (12.5 Kc)
f
Run #400
"Snare Drum"
"Drum"
(5 Kc)
Run # 3
Lower "Drum"
(♩=150)
Run# 410
Bell like sounds
(20 Kc)
f
Run# 301
Piano-like
(♩=150)
(10 Kc)
run # 301
301 repeated
Time in s →

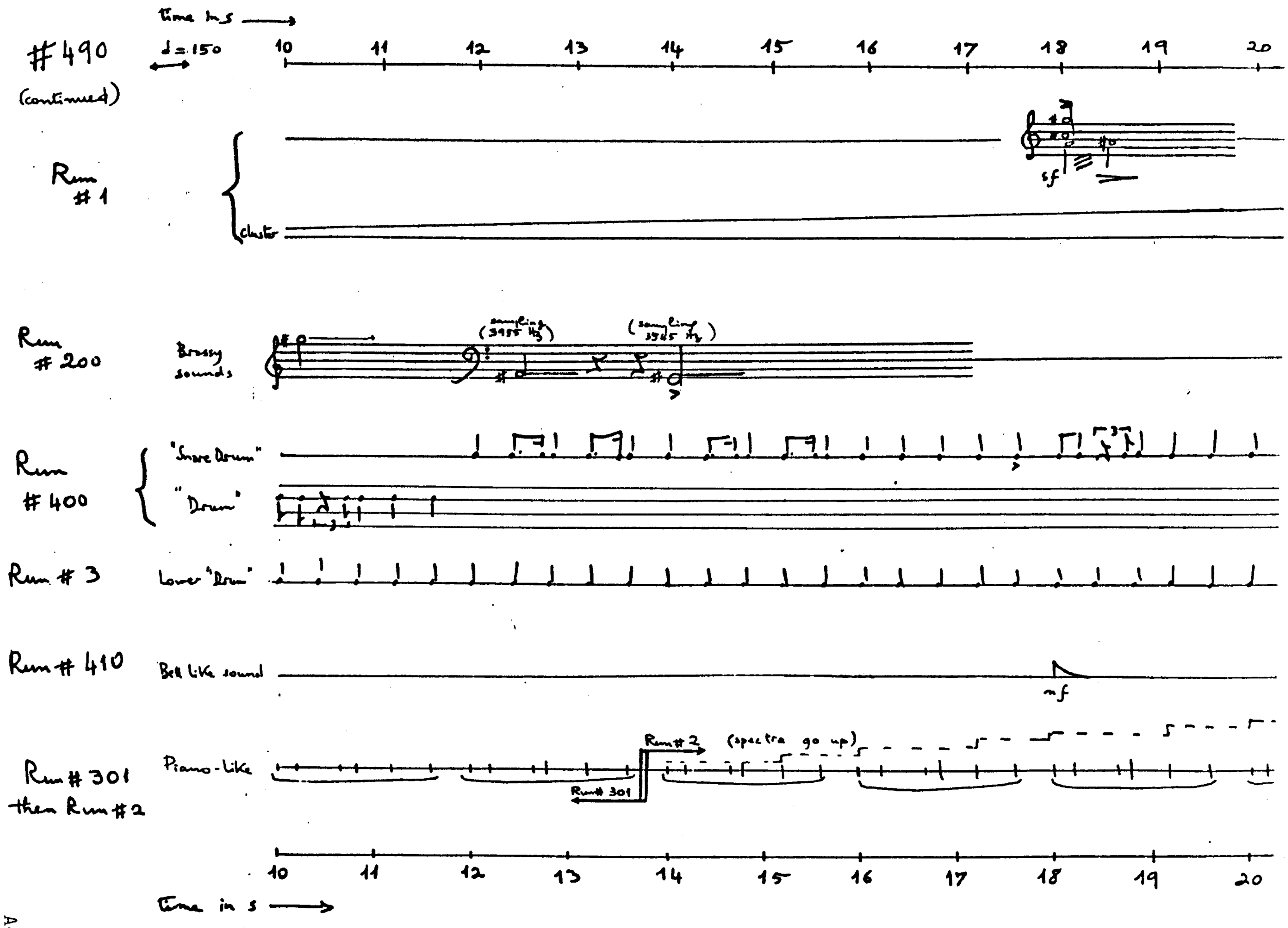
#490
(continued)
time in s
♩=150
10 11 12 13 14 15 16 17 18 19 20
Run #1
cluster
sf
Run #200
Brassy sounds
(sampling 3985 Hz)
(sampling 3985 Hz)
Run #400
"Snare Drum"
"Drum"
Run #3
Lower "Drum"
Run #410
Bell like sound
mf
Run #301 then Run #2
Piano-like
Run #2
(spectra go up)
Run #301
10 11 12 13 14 15 16 17 18 19 20
time in s

#500

This run presents what might be called a "spectral analysis of a chord": for each note of the chord, successive harmonics are gradually introduced. This is performed automatically by subroutine PLF3, listed with the score and described below. The example is in stereo, with a sampling rate of 20,000Hz for each channel; it is played backwards, because it was desired to terminate on the fundamental notes of the chord. (This can be done also by using negative values for TS.)

PLF3 is a first pass subroutine, called by the following data statement:

P(1)	P(2)	P(3)	P(4)	P(5)	P(6)	P(7)	P(8)	
PLF	Action Time	3	NC	N	TS	FACT	DD	;

It operates on a number of subsequent note cards, and this number is specified by NC: e.g., if NC=4, PLF3 will operate on the 4 note cards following the PLF data statement. The instrument number has to be 1 or 2, and these instruments must be such that P(6)* gives the note frequency F. PLF3 will add to each note card it operates on N note cards of frequencies 2F, 3F, ..., (N+1)F, played alternately by instrument number 1 and 2. If the action time of the original note card is AT, the action times of the added note cards will be, respectively, AT + TS, AT + 2TS, ..., AT + NTS. In examples #500 and #501, the instrument 1 and 2 give the same tone quality respectively in the left and the right channel. This

*From now on, the P fields refer to note cards P fields--the P fields of the PLF3 data statement are referred to as NC, N, TS, FACT, DD.

alternation between instrument can be used as well, for instance, to get alternate harmonics of different timbres or intensities.

PLF3 provides for a multiplication of P(5) by FACT from one harmonic to the next. (If FACT $\leq$ 0, P(5) is left the same.) This can be used for example to increase (or to reduce) the amplitude by a constant factor from one harmonic to the next.

Finally, the successive harmonics note durations are related to the fundamental note duration D by D-DD. If DD=0, they have the same duration as the fundamental, as in the figure:

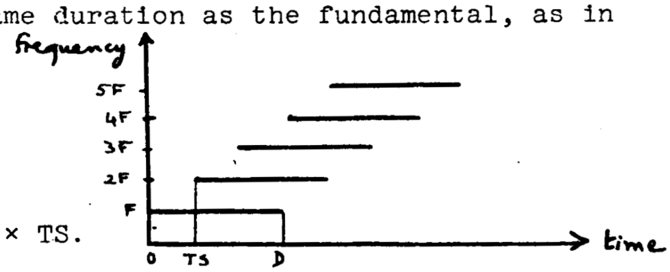

The total duration of the sound is given in this case by D + N × TS.

If DD=TS, the pattern is as on the figure. In this case the total duration of the note is equal to D.

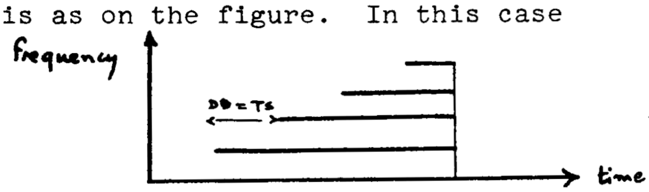

Care must be taken to avoid negative durations if DD>0. (DD can as well be negative, to give harmonics lasting longer than the fundamental.)

In example #300, PFL3 is applied to the note of a chord noted:

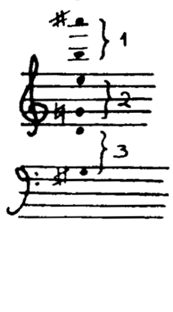

A different PLF statement is used for each pair of bracketed notes: 4 harmonics of group 1, 8 harmonics of group 2 and 10 harmonics of group 3 are generated--at different rates, such that the overall düration is the same for all groups. (Actually the very end of the sound--which becomes the beginning since the example is played backwards--has been cut out.) All notes are played by instrument #1 or #2, which are identical, except that 1 plays into the left channel and 2 into the right channel. Instrument 1 is diagrammed here.

F1 is a sine wave.

This instrument gives a parabolic attack and decay, since F2 is a linear attach and decay as draw here, and since the output of the amplitude controlling generator is multiplied by itself (which yields the dotted curve).

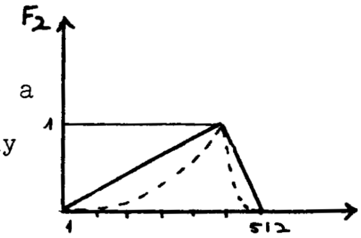

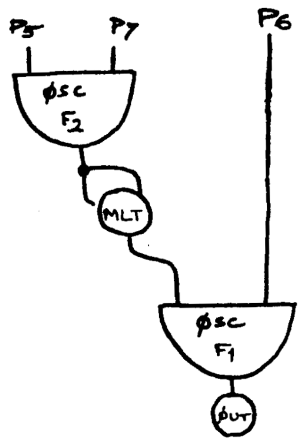

#500

```
COMMENT:SPECTRAL ANALYSIS OF A CHORD TO BE PLAYED BACKWARDS;
COMMENT:TAPE M1084 FILE 2;COMMENT:TO SKIP FIRST FILE;GEN 0 5 1;
COMMENT:G SHARP D GNATURAL E B A SHARP   USE SPECIAL PLF3;
COMMENT:PARABOLIC ATTACK AND DECAY  SAMPLING RATE 20000;SIA 0 4 20000;
INS 0 1;OSC P5 P7 B3 F2 P35;MLT B3 B3 B4;OSC B4 P6 B4 F1 P34;
STR B4 V1 B1;END;
INS 0 2;OSC P5 P7 B3 F2 P35;MLT B3 B3 B4;OSC B4 P6 B4 F1 P34;
STR V1 B4 B1;END;
GEN 0 2 1 1 1;GEN 0 3 2 0 2 4 6 8 10 0;
COMMENT: G SHARP D G NATURAL E B A SHARP;
PLF 1 3 2 10 1 0 0;NOT 1 1 2 500 208 2;NOT 1.01 2 2 500 294 2;
PLF 1 3 2 6 1.25 C 0;NOT 1 1 3.75 500 392 3.75;NOT 1.01 1 3.75 500 659
3.75;
PLF 1 3 2 4 2.5 1;NOT 1 1 7.5 500 988 7.5;NOT 1 1 7.5 500 1865 7.5;
TER 15;
      SUBROUTINE CONVT
      COMMON IP(10),P(100),G(1000)
      IF(P(1).NE.1.)GOTO100
      F=511./G(4)
      P(5)=SQRT(P(5))
      P(6)=F*P(6)
      P(7)=F/P(7)
  100 RETURN
      END
CPLF3LB1                 PLF3 FOR LB1
C     GENERATES HARMONICS WITH ALTERNATING INSTRUMENTS
C     OPERATES ON NOTE CARDS OF INSTS 1 AND 2
C     P(5) AMPLITUDE,P(6) FREQUENCY ON NOTE CARDS
C     ON PLF CARD, P(4) SPECIFIES HOW MANY FOLLOWING NOTE CARDS WILL
C     BE OPERATED ON
C     P(5) GIVES THE NUMBER OF HARMONICS GENERATED
C     P(6) SPECIFIES TIME SEPARATION BETWEEN HARMONICS
C     P(7) SPECIFIES THE AMPLIUDE MULTIPLIER FROM ONE HARMONIC TO NEXT
C     P(8) GIVES THE DURATION DIMINUTION FROM ONE HARMONIC TO THE NEXT
      SUBROUTINE PLF3
      COMMON IP(10),P(100),D(2000)
      NC=P(4)
      N=P(5)
      TS=P(6)
      FACT=P(7)
      DD=P(8)
      DO 1 I=1,NC
      CALL READ1
      CALL WRITE1(10)
      F=P(6)
      DO 2 J=1,N
      P(6)=FLOAT(J+1)*F
      P(2)=P(2)+TS
C     TO CHANGE INSTS NUMBER FROM 1 TO 2 AND VICE VERSA
      AINST=P(3)-1.
      IF(AINST)3,3,4
    3 P(3)=2.
      GOTO5
    4 P(3)=1.
    5 CONTINUE
      IF(FACT.GT.C.) P(5)=P(5)*FACT
      P(4)=P(4)-DD
    2 CALL WRITE1(10)
    1 CONTINUE
  100 RETURN
      END
```

#501

This run is similar to #500: the same harmonics from notes of the same chord have been generated by PLF3 (c.f., #500) (except that a longer portion has been removed from the end of the sound--which again becomes the beginning since the example is played backwards).

The difference in tone quality is due to the difference in the envelope of each component: instead of a gradual parabolic attack and decay, each harmonic (for the example played backwards) has an instantaneous attack and an exponential decay, controlled by F7.

```
COMMENT:SPECTRAL ANALYSIS OF A CHORD TO BE PLAYED BACKWARDS;   #501
COMMENT:G SHARP D GNATURAL E B A SHARP   USE SPECIAL PLF3;
COMMENT:INSTANTANEOUS ATTACK EXPONENTIAL DECAY;
INS 0 1:OSC P5 P7 B3 F2 P35;OSC B3 P6 B4 F1 P34;STR B4 V1 B1;END;
INS 0 2:OSC P5 P7 B3 F2 P35;OSC B3 P6 B4 F1 P34;STR V1 B4 B1;END;
GEN 0 2 1 1 1;GEN 0 7 2 6;
PLF 1 3 2 10 1 1 0;NOT 1 1 2 200 208 2;NOT 1.01 2 2 200 294 2;
PLF 1 3 2 8 1.25 1 0;NOT 1 1 3.75 200 352 3.75;NOT 1.01 1 3.75 500 659
3.75;
PLF 1 3 2 4 2.5 1 0;NOT 1 1 7.5 200 983 7.5;NOT 1 1 7.5 200 1865 7.5;
TER 15;
      SUBROUTINE CONVT
      COMMON IP(10),P(100),G(1000)
      IF(P(1).NE.1.)GOTO100
      F=511./G(4)
      P(6)=F*P(6)
      P(7)=F/P(7)
 100  RETURN
      END
CPLF3LB1                    PLF3 FOR LB1
C     GENERATES HARMONICS WITH ALTERNATING INSTRUMENTS
C     OPERATES ON NOTE CARDS OF INSTS 1 AND 2
C     P(5) AMPLITUDE,P(6) FREQUENCY ON NOTE CARDS
C     ON PLF CARD, P(4) SPECIFIES HOW MANY FOLLOWING NOTE CARDS WILL
C     BE OPERATED ON
C     P(5) GIVES THE NUMBER OF HARMONICS GENERATED
C     P(6) SPECIFIES TIME SEPARATION BETWEEN HARMONICS
C     P(7) SPECIFIES THE AMPLIUDE MULTIPLIER FROM ONE HARMONIC TO NEXT
C     P(8) GIVES THE DURATION DIMINUTION FROM ONE HARMONIC TO THE NEXT
      SUBROUTINE PLF3
      COMMON IP(10),P(100),D(2000)
      NC=P(4)
      N=P(5)
      TS=P(6)
      FACT=P(7)
      DD=P(8)
      DO 1 I=1,NC
      CALL READ1
      CALL WRITE1(10)
      F=P(6)
      DO 2 J=1,N
      P(6)=FLOAT(J+1)*F
      P(2)=P(2)+TS
C     TO CHANGE INSTS NUMBER FROM 1 TO 2 AND VICE VERSA
      AINST=P(3)-1.
      IF(AINST)3,3,4
 3    P(3)=2.
      GOTO5
 4    P(3)=1.
 5    CONTINUE
      IF(FACT.GT.0.) P(5)=P(5)*FACT
      P(4)=P(4)-DD
 2    CALL WRITE1(10)
 1    CONTINUE
 100  RETURN
      END
```

#502

This sound results from mixing #500 with itself at different speeds. The speeds have been changed in a way equivalent to playing back #500 simultaneously at a sampling rate of 40,000Hz, 20,000Hz , and 10,000Hz. (This example, in stereo, is again presented backwards.)

The remarks mentioned in #512 apply here.

#503

This sound results from mixing #501 with itself at different speeds. The speeds have been changed in a way equivalent to playing back #501 simultaneously at a sampling rate of 40,000Hz., 20,000Hz, and 10,000Hz. (This example, in stereo, is again presented backwards.)

The remarks mentioned in #512 apply here.

#510

This run gives a bunch of siren-like glissandi.

Instrument #1

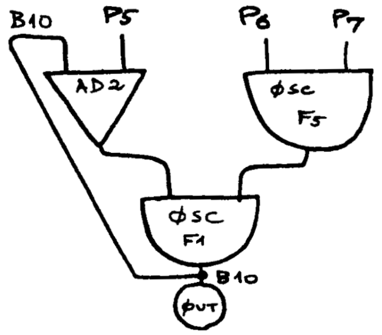

This instrument delivers a variable frequency sound. The wave is a sine wave with feedback (a process suggested by A. Layzer). The frequency controlling oscillator has a cycle of 8s(P7) repeated 3 times.

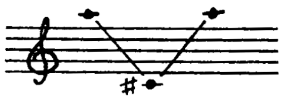

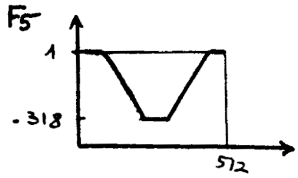

Instrument #2

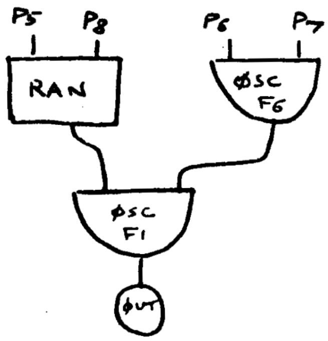

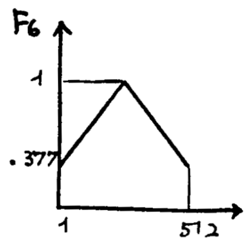

This instrument gives a noise band with variable center frequency. The 1/2 bandwidth is given by P8. The frequency cycle lasts 6s(P7).

Instrument #3

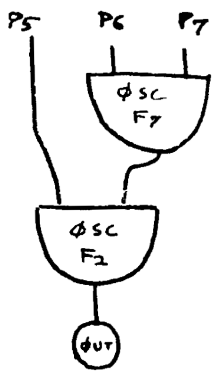

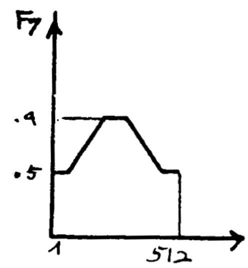

This instrument gives a wave with variable frequency. The frequency cycle (P7) lasts 12s. The wave given by stored function F2 is truly periodic, but it simulates the sum of inharmonically related partials: the fundamental frequency is 20Hz and the wave consists simply of harmonics #21, 29, 39: thus frequencies 420Hz, 580Hz and 780Hz are present.

F2 is a drastically varying function; to minimize noise due to roundoff errors, IØS is used here (This is the version of the oscillator which interpolates between 2 successive samples whenever the sum of increments is not an integer.).

Instrument #4

This instrument gives a sine wave with variable frequency.

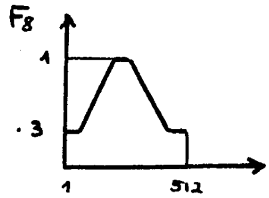

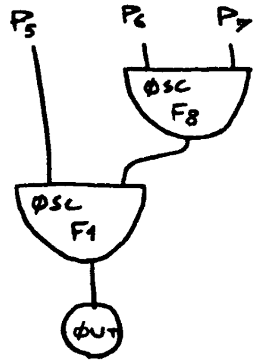

Note: here the rate at which the frequency controlling functions are scanned is determined by P7 (converted by P(7)=F/P(7)): it is divorced from the duration of the note; in effect these functions are scanned several times for one note length.

#510

```
COMMENT:SIRENE POUR MUTATION;
COMMENT:TAPE 1779;
COMMENT:FEEDBACK GLISSANDO;
INS 0 1;OSC P6 P7 B4 F5 P8;AD2 B10 P5 B11;
OSC B11 B4 B10 F1 P30;OUT B10 B1;END;
COMMENT:NOISE BAND GLISSANDO;
INS 0 2;RAN P5 P8 B4 P30 P29 P28;
OSC P6 P7 B5 F6 P9;OSC B4 B5 B5 F1 P27;OUT B5 B1;END;
COMMENT:INHARMONIC GLISSANDO;
INS 0 3;OSC P5 P7 B4 F7 P8;IOS P5 B4 B5 F2 P30;
OUT B5 B1;END;
COMMENT:SINES GLISSANDO;
INS 0 4;OSC P6 P7 B4 F8 P8;OSC P5 B4 B5 F1 P30;OUT B5 B1;END;
SIA 0 4 10000;
GEN 0 2 1 1 1;
GEN 0 4 2 1 21 0 1 512 1 29 0 1 512 1 39 0 1 512;
GEN 0 1 5 .999 1 .999 25 .318 231 .318 281 .999 487 .999 512;
GEN 0 1 6 .377 1 .999 256 .377 512;
GEN 0 1 7 .5 1 .5 15 .9 241 .9 271 .5 497 .5 512;
GEN 0 1 8 .333 1 .333 8 .999 248 .999 264 .333 504 .333 512;
NOT 1 1 24 450 880 8;
NOT 1 2 24 400 1660 6 200;
NOT 1 3 24 200 20 12;
NOT 1 4 24 70 2400 3 0;
NOT 1 4 24 70 2400 3 128;
NOT 1 4 24 70 2400 3 256;
NOT 1 4 24 70 2400 3 384;
TER 25;
C         SIRENE POUR MUTATION CONVT
      SUBROUTINE CONVT
      COMMON IP(10),P(100),G(1000)
      IF(P(1).NE.1.)GOTO100
      F=511./G(4)
      P(6)=F*P(5)
      P(7)=F/P(7)
      IF(P(3).EQ.2.)P(8)=F*P(8)
  100 RETURN
      END
```

#511

This run gives a bunch of simultaneous glissandi, played at double speed (20,000Hz sampling rate instead of 10,000Hz).

1st Section

Instrument #1

This instrument delivers a variable frequency sound. The wave is a sine wave with feedback (a process suggested by A. Layzer). The frequency controlling oscillator has a cycle of 4.5s, repeated 4 times.

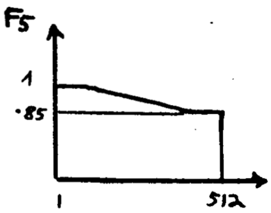

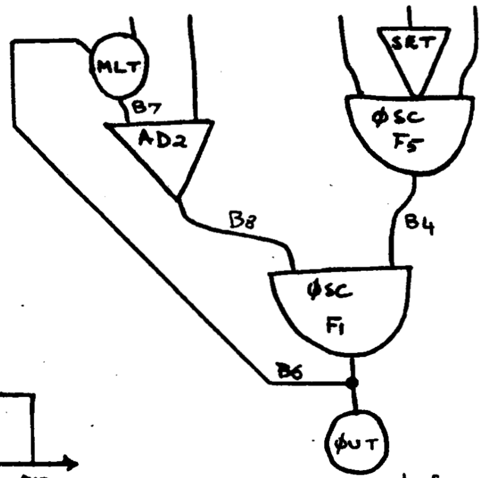

NB: B6 must be reserved for inst #1.

Instrument #2

This instrument gives a noise band with variable center frequency. P8: half bandwidth
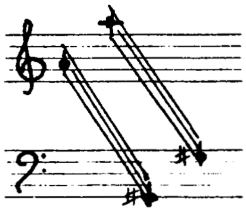
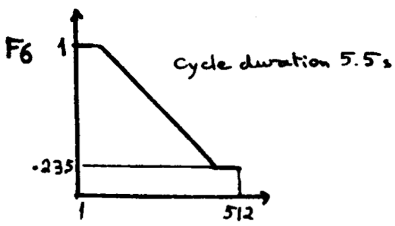

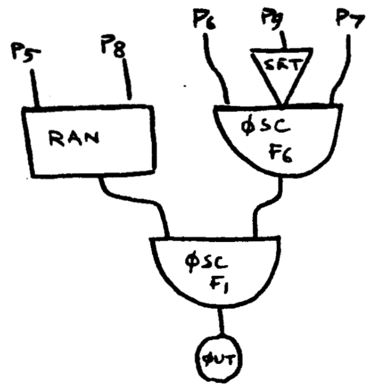

Instrument #3

This instrument gives a variable frequency triangular wave.

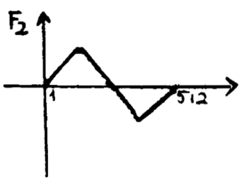

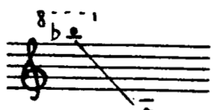

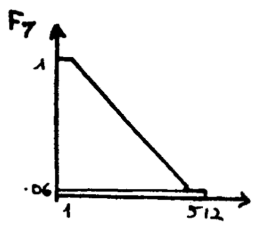

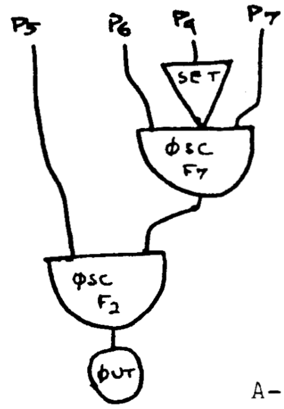

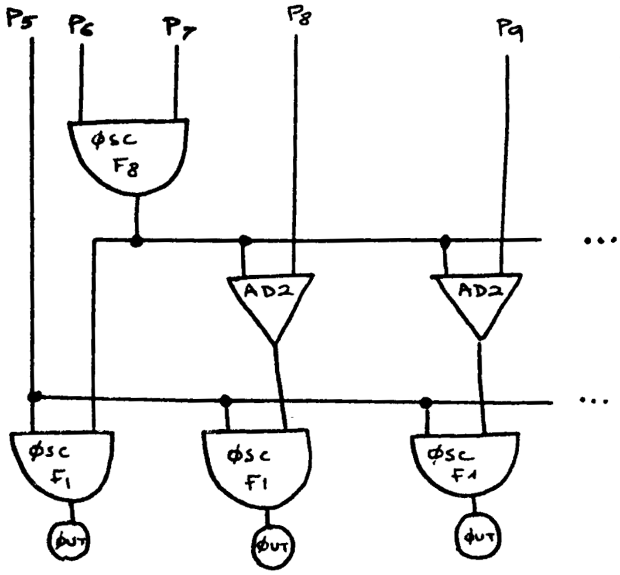

2nd Section

Instrument #4

This instrument gives a glissando for six "parallel" voices, such that there is a constant frequency difference between the voices (instead of a constant frequency ratio, which would give a constant musical interval). This was first done by J. Clough.

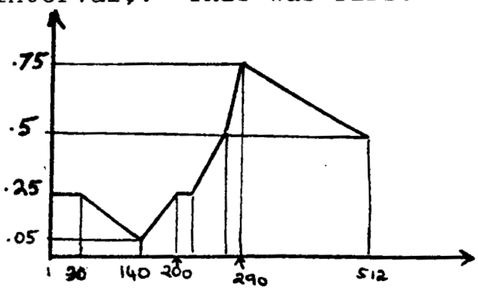

Here the glissando is relatively narrow. The parameters P6, P8, P9, P10, P11, P12 correspond to an initial chord noted:
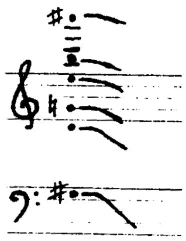
#511

```
COMMENT:GLISSANDI FOR LB;
COMMENT:ON TAPE M2804,FILE 1;
COMMENT:FEEDBACK ;
INS 0 1; SET P9; OSC P6 P7 B4 F5 P30; MLT P8 B6 B7; AD2 P5 B7 B8;
OSC B8 B4 B6 F1 P29; OUT B6 B1; END;
COMMENT:NOISE BAND;
INS 0 2;
SET P9; OSC P6 P7 B4 F6 P30; RAN P5 P8 B3 P10 P29 P28;
OSC B3 B4 B5 F1 P27; OUT B5 B1; END;
COMMENT:SIMPLE GLISSANDO;
INS 0 3;
SET P9; OSC P6 P7 B4 F7 P30; OSC P5 B4 B5 F2 P29; OUT B5 B1; END;
SIA 0 4 10000;
GEN 0 2 1 1 1; GEN 0 3 2 0 10 0 -10 0 ;
GEN 0 1 5 .999 1 .999 50 .85 462 .85 512;
GEN 0 1 6 .999 1 .999 20 .235 492 .235 512;
GEN 0 1 7 .999 1 .999 25 .06 487 .06 512;
NOT 1 1 18 300 208 4.5 .7;
NOT 1 2 16.5 300 440 5.5 80;
NOT 3.75 2 11 300 880 5.5 150;
NOT 1 3 17.6 200 1864 2.2;
NOT 1.7 3 16.9 200 1864 2.2;
NOT 2.4 3 16.2 200 1864 2.2;
SEC 20;
COMMENT:MULTIPLE SYNCHRONOUS GLISSANDI;
INS 0 4; OSC P6 P7 B4 F8 P24; AD2 B4 P8 B5; AD2 B4 P9 B6; AD2 B4 P10 B7;
AD2 B4 P11 B8; AD2 B4 P12 B9; OSC P5 B4 B4 F1 P30; OUT B4 B1;
OSC P5 B5 B5 F1 P29; OUT B5 B1; OSC P5 B6 B6 F1 P28; OUT B6 B1;
OSC P5 B7 B7 F1 P27; OUT B7 B1;
OSC P5 B8 B8 F1 P26; OUT B8 B1; OSC P5 B9 B9 F1 P25; OUT B9 B1; END;
GEN 0 1 8 .25 1 .25 30 .05 140 .25 200 .25 210 .50 270 .75 290 .05 512;
NOT 1 4 20 300 10.65 20 4.402 9.420 23.09 39.936 84.836;
TER 22;
CGCONVT                  CONVT FOR GLISSANDI L B
      SUBROUTINE CONVT
      COMMON IP(10),P(100),G(1000)
      IF(P(1).NE.1.)GOTO100
      F=512./G(4)
      P(7)=F/P(7)
      IF(P(3).EQ.4.)GOTO100
      P(6)=F*P(6)
      IF(P(3).EQ.2.) P(8)=F*P(8)
 100  RETURN
      END
```

#512

This example presents sounds obtained by mixing from the sound of the 2nd section of run #511 (glissandi with constant difference in frequency between voices).

The original sound underwent only transpositions by speed changing before mixing. What differs from one sound of this example to another are both the frequency regions of the sounds (low, medium, high) and the density of mixing, that is, the number of voices. The densest passage has a mixing density of 36, and since the original sound comprises 6 voices, the final sound comprises up to 6×36, i.e., more than 200 voices.

Theoretically sounds of this example could have been obtained directly from the computer, without later manipulation, since the sound manipulations performed electroacoustically (transposition, mixing) are easy to do with Music V. But this process allowed to produce complex textures while saving computer time: and it is quite likely that the sound quality of a computer run comprising such a large number of voices would be very poor, since there are only a few samples for the definition of each voice. Moreover this process allows to control the amplitude balance of the various components of the mixing. It is, of course, subject to well-known inconveniences: noise build-up, synchronisation problems (c.f., #490).

#513

This run presents a little more than one octave of an "endless glissando", which could be pursued indefinitely since it is back to its original point after an octave "descent" (c.f., R. N. Shepard, J.Acoust.Soc.Am.,36,1964,pp.2346-53; J. C. Risset, J.Acoust.Soc.Am.,46,1969, p. 88 (abstract only)

The gliding sound comprises 10 components, all generated by instrument #1, diagrammed here.

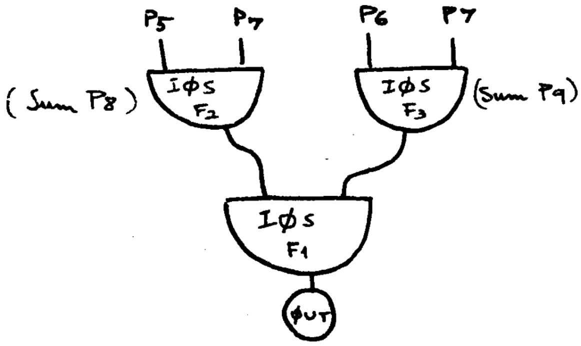

Function F3 controls the frequency of the components. It goes down exponentially from 1 to 2^{-10} (10 octaves below). For each component, the initial sum is specified in P9; the value of these sums for the different components are respectively: 0, $\frac{1}{10}\times 511$, $\frac{2}{10}\times 511$, $\frac{3}{10}\times 511$, ..., $\frac{9}{10}\times 511$. Since P6, which gives the maximum frequency, has the same value 3900 for all components, the components are initially one octave apart. The duration of the frequency cycle is given in P7 and is 120s: this means that each component goes down an octave after $\frac{120}{10}$=12s--and the components stay locked one octave apart. (After one octave descent, the lowest component becomes the highest one.)

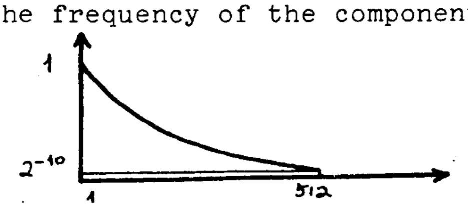

Function F4 controls the amplitude of the components. It is a bell-shaped curve which consists of a portion of a sine

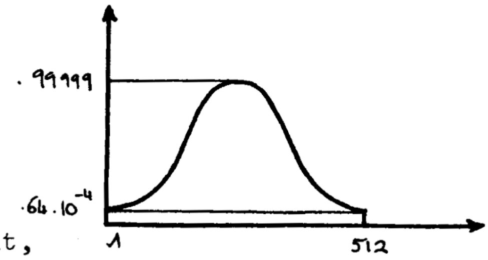

wave with a D.C. bias, if the ordinate scale is in db. (See description of GEN7). For each component, the initial sum is specified in P8: the value of these sums are the same as those specified in P9, and the duration of the amplitude cycle is the same as that of the frequency cycle. Thus the component amplitudes scan this curve while their frequencies scan the frequency curve. This has the effect of strongly attenuating low and high frequency components. (Even though the specified P8 and P9 are equal, the two oscillators should not share the same P field for the sum.) After one octave descent, the pattern is the same as the starting pattern (except for errors due to the imprecise definition of small increments which cause the duration of the cycle to be different from the one expected--this may be severe for less than 36 bit word computers.

Function F1 is a sine wave.

IØS has been used instead of ØSC for the three oscillators of the instrument. It gives a truly continuous--not a quantized--frequency glide; similarly it gives a more gradual amplitude change. But it is also preferable for the waveshape oscillator--in this case,as in other cases with glissandi or other frequency modulations, round off errors with ØSC (c.f., M. V. Mathews, The Technology of Computer Music, MIT Press, 1969, p.134) are specially noticeable because the corresponding noise goes on and off, diminishing when the frequency is such that the sum of increments (the abscissa) is close to an integer value.

To get continuously descending glissandos, one could compute an entire descent of many octaves; it is more economical to compute one cycle (i.e., one octave) and use the computer to copy these samples successively as many times as desired. However, due to the errors mentioned above, one has to inspect the samples and choose to make the concatenation at a point which will give no appreciable discontinuity in either frequency, amplitude, and waveform.

513

```
COMMENT:ENDLESS GLISSANDI WITH 3 IOS;
COMMENT: TAPE M1913;
COMMENT:CYCLE DURATION 12 S  10 COMPONENTS;
INS 0 1;IOS P5 P7 B3 F2 P8;IOS P6 P7 B4 F3 P9;
IOS P3 B4 B5 F1 P25;OUT B5 B1;END;
COMMENT:TO SET GENERAL CONVT; SV2 0 10 2 6 -7;
SIA 0 4 10000;
GEN 0 2 1 1 1;GEN 0 7 2 0;GEN 0 7 3 -10;
NOT 1 1 14 850 3900 120.00 0 0;
NOT 1 1 14 850 3900 120.00 51.1 51.1;
NOT 1 1 14 850 3900 120.00 102.2 102.2;
NOT 1 1 14 850 3900 120.00 153.3 153.3;
NOT 1 1 14 850 3900 120.00 204.4 204.4;
NOT 1 1 14 850 3900 120.00 255.5 255.5;
NOT 1 1 14 850 3900 120.00 306.6 306.6;
NOT 1 1 14 850 3900 120.00 357.7 357.7;
NOT 1 1 14 850 3900 120.00 408.8 408.8;
NOT 1 1 14 850 3900 120.00 459.9 459.9;
TER 16;
```

#514

This run is related to #513: but here, while the components frequencies go down, the center of gravity of the frequency distribution goes up (instead of staying approximately invariant as in #513), so that the sound goes down 3 octaves while becoming shriller--and that it ends up much higher than it started.

The basic instrument is similar to that used in #513, except that here an instrument comprises five such units, each of which gives one frequency component; so only two note cards are required to get the 10 components of the sound. Functions F1, F2, and F3 are the same as those used in #513. The initial sums are defined in the same way.

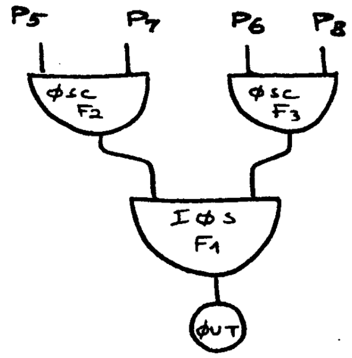

While the component frequencies go down, the spectral envelope goes up because the duration of the entire frequency cycle (given by P8=60s) is longer than the duration of the entire amplitude cycle (given by P7=30s). (This may be easier to understand by examining what happens to the initial spectral configuration of #513 when the amplitude increment is larger than the frequency increment.) If the process was allowed to continue longer, the peak of the spectral distribution would continue to be translated towards the highest frequencies and then it would jump to the lowest frequencies and resume its translation upwards.

#514

```
COMMENT:TONALITY GOES DOWN  TONE HEIGHT GOES UP;
COMMENT:DURATION 18 S  FREQUENCY CYCLE 6 S;
COMMENT:TAPE M2394 FILE 5;GEN 0 5 4;
INS 0 1;
OSC P5 P7 B2 F2 P10;OSC P6 P8 B3 F3 P11;IOS B2 B3 B2 F1 P30;OUT B2 B1;
OSC P5 P7 B4 F2 P12;OSC P6 P8 B5 F3 P12;IOS B4 B5 B4 F1 P29;OUT B4 B1;
OSC P5 P7 B6 F2 P14;OSC P6 P8 B7 F3 P15;IOS B6 B7 B6 F1 P28;OUT B6 B1;
OSC P5 P7 B8 F2 P16;OSC P6 P8 B9 F3 P17;IOS B8 B9 B8 F1 P27;OUT B8 B1;
OSC P5 P7 B10 F2 P18;OSC P6 P8 B11 F3 P19;IOS B10 B11 B10 F1 P26;
OUT B10 B1;END;
SIA 0 4 10000;
GEN 0 2 1 1 1;GEN 0 7 2 0;GEN 0 7 3 -10;
COMMENT:FREQUENCY CYCLE 6 S   AMPLITUDE CYCLE 3 S;
NOT 1 1 18 500 4000 30 60 0 0 0 51.1 51.1 102.2 102.2 153.3 153.3
204.4 204.4;
NOT 1 1 18 500 4000 30 60 0 255.5 255.5 306.6 306.6 357.7 357.7
408.8 408.8 459.9 459.9;
TER 20;
C          CONVT POUR CONFLIT CHROMA HAUTEUR BRUTE
      SUBROUTINE CONVT
      COMMON IP(10),P(100),G(1000)
      IF(P(1).NE.1.)GOTO100
      F=511./G(4)
      P(6)=F*P(6)
      P(7)=F/P(7)
      P(8)=F/P(3)
 100  RETURN
      END
```

#515

This run presents sounds whose tone height goes up (or down) continuously, without octave jump, while their tonality remains invariant (in this case corresponding to a B). This is achieved by having fixed frequency octave components whose spectral envelope is translated as in #514.

Instrument #1 is used for each of the 8 components of the sounds. It is diagrammed here. The component frequency is given by P6; all components are in octave relation. For each component, the initial sum is specified in P8; the value of these sums for the different components are close to, respectively, 0, $\frac{1}{8}\times 511$, $\frac{2}{8}\times 511$, ..., $\frac{9}{10}\times 511$. Each sound lasts 5s, which corresponds to less than an entire amplitude cycle.

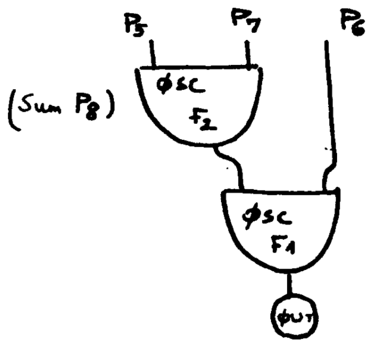

In the 1st section, function F2 is a single peak bell-shaped curve with 84db difference between peak and end points ordinates (c.f., description of GEN7).

In the 2nd section, function F2 is a single peak bell-shaped curve with 42db difference between peak and end points ordinates (for this section and the two which follow, c.f., description of GEN8).

In the 3rd section, function F2 is a double peak bell-shaped curve--hence the repetition of the pattern.

In the 4th section, function F2 is a triple peak bell-shaped curve.

Note: effects similar to those obtained here can probably be obtained more economically, if not as conveniently and precisely, through the use of FLT. This remark also applies to #516.

#515

```
COMMENT:SPECTRAL ENVELOPE TRANSLATION FOR OCTAVE COMPONENTS;
COMMENT:FIXED FREQUENCIES;
COMMENT:TAPE 1553 FILE 2;GEN 0 5 1;
INS 0 1;OSC P5 P7 B3 F2 P8;OSC B3 P6 B3 F1 P25;OUT B3 B1;END;
STA 0 4 10000;
COMMENT:TO SET GENERAL CONVT;      SV2 0 10 1 6;
GEN 0 2 1 1 1;
COMMENT:AMPLITUDE FUNCTION ONE PEAK 84 DB AMBITUS;GEN 0 7 2 0;
NOT 1 1 5 500 30 .00716 128;
NOT 1 1 5 500 60 .00716 192;
NOT 1 1 5 500 120 .00716 256;
NOT 1 1 5 500 240 .00716 320;
NOT 1 1 5 500 480 .00716 384;
NOT 1 1 5 500 960 .00716 448;
NOT 1 1 5 500 1920 .00716 0;
NOT 1 1 5 500 3840 .00716 64;
SEC 7;
COMMENT:ONE PEAK AMBITUS 42 DB;GEN 0 8 2 0;
NOT 1 1 5 500 30 .00716 128;
NOT 1 1 5 500 60 .00716 192;
NOT 1 1 5 500 120 .00716 256;
NOT 1 1 5 500 240 .00716 320;
NOT 1 1 5 500 480 .00716 384;
NOT 1 1 5 500 960 .00716 448;
NOT 1 1 5 500 1920 .00716 0;
NOT 1 1 5 500 3840 .00716 64;
SEC 7;
COMMENT:TWO PEAKS AMBITUS 42 DB;GEN 0 8 2 1;
NOT 1 1 5 500 30 .00716 128;
NOT 1 1 5 500 60 .00716 192;
NOT 1 1 5 500 120 .00716 256;
NOT 1 1 5 500 240 .00716 320;
NOT 1 1 5 500 480 .00716 384;
NOT 1 1 5 500 960 .00716 448;
NOT 1 1 5 500 1920 .00716 0;
NOT 1 1 5 500 3840 .00716 64;
SEC 7;
COMMENT:THREE PEAKS AMBITUS 42 DB;GEN 0 8 2 -1;
NOT 1 1 5 500 30 .00716 128;
NOT 1 1 5 500 60 .00716 192;
NOT 1 1 5 500 120 .00716 256;
NOT 1 1 5 500 240 .00716 320;
NOT 1 1 5 500 480 .00716 384;
NOT 1 1 5 500 960 .00716 448;
NOT 1 1 5 500 1920 .00716 0;
NOT 1 1 5 500 3840 .00716 64;
TER 7;
```

#516

This run presents sounds of variable spectrum; the variation of spectrum is achieved by translating (as in #514) the spectral envelope of fixed frequency components.

The instrument used is the same as in #515. However, 10 frequency components are used instead of 8, and here they are not in octave relation.

In the first 3 sections the frequency components form a harmonic series:

(1) In section 1, function F2 is a single peak bell-shaped curve with 42 db difference between peak and end points ordinates (For the amplitude controlling functions of this run, c.f., description of GEN8).

(2) In section 2, F2 is a double peak bell-shaped curve.

(3) In section 3, F2 is a triple peak bell-shaped curve.

In the last 3 sections the frequency components are not harmonically related.:

(4) In section 4, F2 is as in section 1.

(5) In section 5, F2 is as in section 2.

(6) In section 6, F2 is as in section 3.

See note at the end of #515.

#516

```
COMMENT:VARIABLE SPECTRUM SOUNDS THROUGH SPECTRAL ENVELOPE TRANSLATION;
COMMENT:FIRST HARMONIC  THEN  INHARMONIC FREGLENCIES;
COMMENT:TAPE M1495;
INS 0 1;OSC P5 P7 B7 F2 P8;OSC B3 P6 B3 F1 P25;OUT B3 B1;END;
SIA 0 4 10000;
COMMENT:TO SET GENERAL CONVT; SV2 0 10 1 6;
GEN 0 2 1 1 1;
COMMENT:HARMONIC FREGLENCIES;
COMMENT:AMPLITUDE FUNCTION ONE PEAK 42 DB AMBITUS;GEN 0 8 2 0;
NOT 1 1 3 500 200  .02 0;
NOT 1 1 3 500 400  .02 51.1;
NOT 1 1 3 500 600  .02 102.2;
NOT 1 1 3 500 800  .02 153.3;
NOT 1 1 3 500 1000 .02 204.4;
NOT 1 1 3 500 1200 .02 255.5;
NOT 1 1 3 500 1400 .02 306.6;
NOT 1 1 3 500 1600 .02 357.7;
NOT 1 1 3 500 1800 .02 408.9;
NOT 1 1 3 500 2000 .02 459.9;
SEC 5;
COMMENT:TWO PEAKS;GEN 0 8 2 1;
NOT 1 1 3 500 200  .02 0;
NOT 1 1 3 500 400  .02 51.1;
NOT 1 1 3 500 600  .02 102.2;
NOT 1 1 3 500 800  .02 153.3;
NOT 1 1 3 500 1000 .02 204.4;
NOT 1 1 3 500 1200 .02 255.5;
NOT 1 1 3 500 1400 .02 306.6;
NOT 1 1 3 500 1600 .02 357.7;
NOT 1 1 3 500 1800 .02 408.9;
NOT 1 1 3 500 2000 .02 459.9;
SEC 5;
COMMENT:THREE PEAKS;GEN 0 8 2 -1;
NOT 1 1 3 500 200  .02 0;
NOT 1 1 3 500 400  .02 51.1;
NOT 1 1 3 500 600  .02 102.2;
NOT 1 1 3 500 800  .02 153.3;
NOT 1 1 3 500 1000 .02 204.4;
NOT 1 1 3 500 1200 .02 255.5;
NOT 1 1 3 500 1400 .02 306.6;
NOT 1 1 3 500 1600 .02 357.7;
NOT 1 1 3 500 1800 .02 408.9;
NOT 1 1 3 500 2000 .02 459.9;
SEC 5;
COMMENT:INHARMONIC FREQUENCIES;
COMMENT:AMPLITUDE FUNCTION ONE PEAK 42 DB AMBITLS;GEN 0 8 2 0;
NOT 1 1 3 500 80 .02 255.5;
NOT 1 1 3 500 230 .02 459.9;
NOT 1 1 3 500 315 .02 306.3;
NOT 1 1 3 500 650 .02 204.4;
NOT 1 1 3 500 750 .02 102.2;
NOT 1 1 3 500 930 .02 0;
NOT 1 1 3 500 1400 .02 153.3;
NOT 1 1 3 500 2500 .02 357.7;
NOT 1 1 3 500 3700 .02 408.9;
SEC 5;
COMMENT:TWO PEAKS;GEN 0 8 2 1;
NOT 1 1 3 500 80 .02 255.5;
NOT 1 1 3 500 230 .02 459.9;
NOT 1 1 3 500 315 .02 306.3;
NOT 1 1 3 500 650 .02 204.4;
NOT 1 1 3 500 750 .02 102.2;
```

#516, continued

```
NOT 1 1 3 500 930 .02 0;
NOT 1 1 3 500 1400 .02 153.3;
NOT 1 1 3 500 2500 .02 357.7;
NOT 1 1 3 500 3700 .02 408.8;
SEC 5;
COMMENT:THREE PEAKS;GEN 0 8 2 -1;
NOT 1 1 3 500 80 .02 255.5;
NOT 1 1 3 500 230 .02 459.9;
NOT 1 1 3 500 315 .02 306.3;
NOT 1 1 3 500 650 .02 204.4;
NOT 1 1 3 500 750 .02 102.2;
NOT 1 1 3 500 930 .02 0;
NOT 1 1 3 500 1400 .02 153.3;
NOT 1 1 3 500 2500 .02 357.7;
NOT 1 1 3 500 3700 .02 408.8;
TER 5;
```

#517

This example presents a fragment obtained by mixing from runs #510, 511, 513 to 516 (and a couple of other similar runs).

The original sounds underwent only transpositions by speed changing before mixing (except for the sound analagous to the one presented in #514, which was artificially reverberated by means of an EMT metallic plate--a similar reverberation could have been performed by computer).

The remarks mentioned by #512 also apply here.

#550

This run presents an attempt to prolong harmony into timbre: a chord, played with a timbre generated in a way similar to ring modulation, is echoed by a gong-type sound whose components are the fundamentals of the chord. The latter sound is perceived as a whole rather than as a chord, yet its tone quality is clearly related to the chord's harmony. The passage is as follows:

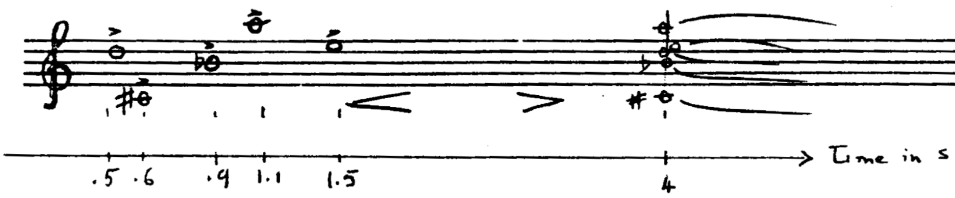

Instrument #1 is used to generate the notes of the chord, in a way similar to a ring modulator combining the outputs of a sine wave and a square wave oscillator. Low values have to be used for the amplitude inputs P5 and P7, since the resulting maximum amplitude will be of the order of P5 × P7. The dominant frequency of a note played with this instrument is the difference between P8 and P6. Function F3 controls the envelope of the sine wave component, hence the

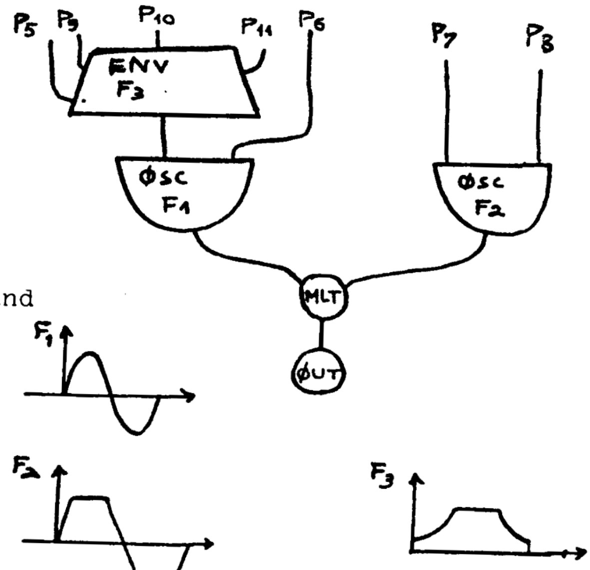

envelope of the note; this modulation at the same time produces spectrum changes. Notes of the chord are first played with a short (10 ms), percussive attack, then with a cresc-decresc type envelope.

Instrument #2, used for the gong-like sound, is similar to instrument #1 of #420: there is one note card for each frequency component; the waveshape is a sine wave; each component is decaying exponentially at its own rate. As was mentioned earlier, the frequencies of the components are equal to the frequencies of the notes of the preceding chord.

550

```
COMMENT:PROLONGATION OF HARMONY INTO TIMBRE;
INS 0 1;ENV P5 F3 B7 P9 P10 P11 P30;OSC B3 P6 B3 F1 P29;
OSC P7 P8 B4 F2 P28;MLT B3 B4 B3;OUT B3 B1;END;
INS 0 2;OSC P5 P7 B3 F4 P30;OSC B3 P6 B3 F1 P29;OUT B3 B1;END;
COMMENT:TO SET GENERAL CONVT;
SV2 0 10 3 6 8 198;
SV2 0 20 2 6 -7;
GEN 0 2 1 1 1;
GEN 0 3 2 0 10 10 10 10 10 0 -10 -10 -10 -10 -10 0;
GEN 0 6 3 10 .99 .99 10;
GEN 0 7 4 -9;
NOT .5 1 .6 18 424 18 1000 .01 0 .6;
NOT .6 1 .6 18 727 18 1000 .01 0 .6;
NOT .9 1 3.6 18 424 18  1000 2.3 0 1.2;
NOT .9 1 .6 18 1542 18 2000 .01 0 .6;
NOT 1 1 3.5 18 727 18 1000 3.2 0 1.2;
NOT 1.1 1 .6 18 1136 18 2000 .01 0 .6;
NOT 1.3 1 3.2 18 1542 18 2000 1.9 0 1.2;
NOT 1.4 1 .6 18 1342 18 2000 .01 0 .6;
NOT 1.5 1 3 18 1136 18 2000 1.9 0 1.2;
NOT 1.8 1 2.7 18 1342 18 2000 1.4 0 1.2;
COMMENT:TIMBRE ECHO TO PREVIOUS HARMONY;
NOT 4 2 10 400 273 10;NOT 4 2 7.5 200 455 7.5;
NOT 4 2 4.5 200 575 4.5;NOT 4 2 6.5 150 648 6.5;
NOT 4 2 4 150 864 4;
TER 15;
```